Hose Reels

A Complete Family of High Quality Reels

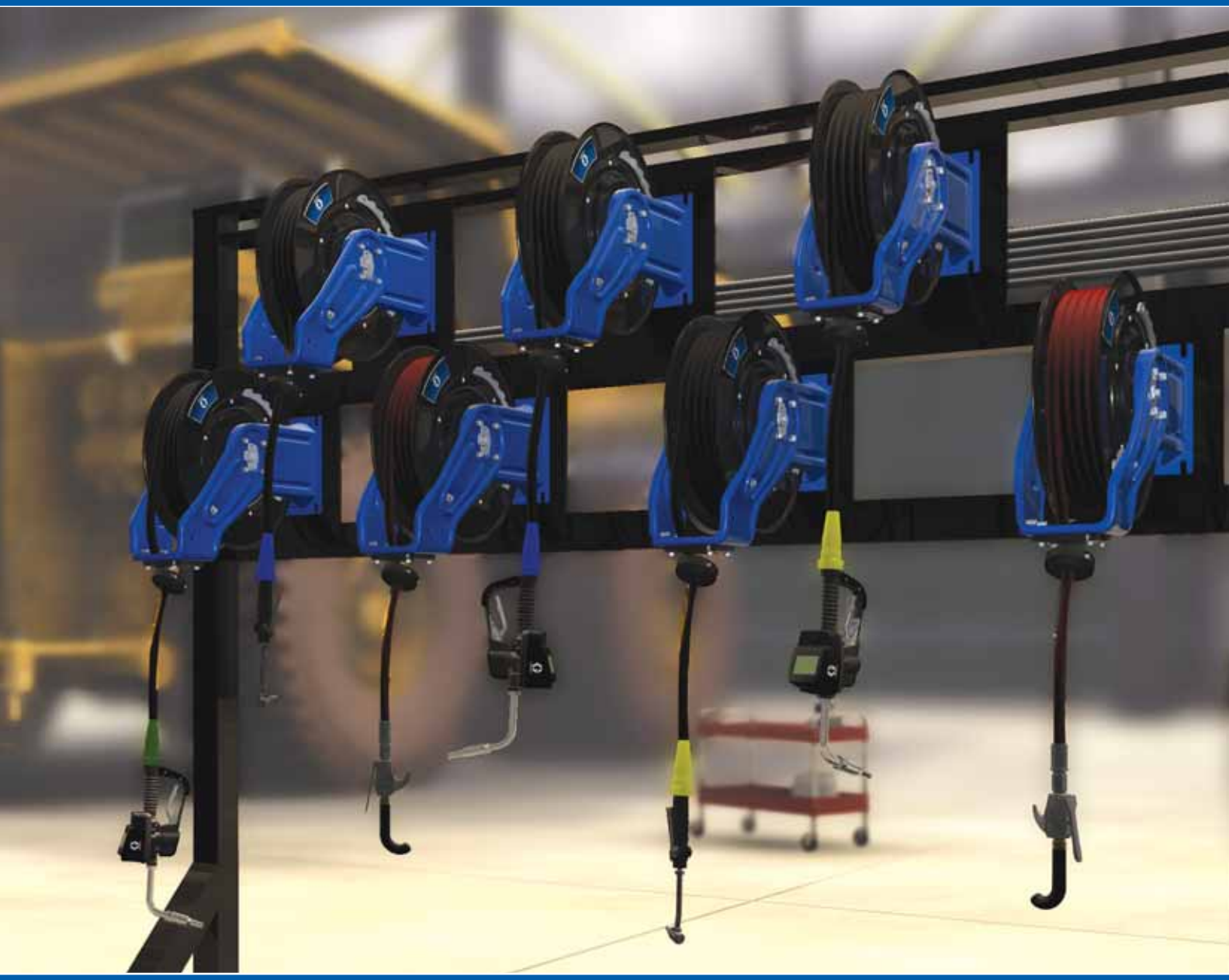

PROVEN QUALITY. LEADING TECHNOLOGY.

What Makes a Good Hose Reel?

Durability, performance and value built into every one of our new hose reels.

A robust frame, hose length and size are important, but the spring, latch and swivel are really the core of a hose reel. Our new spring design makes it easy to pull down–especially those last 10 feet, and a spring latch that retracts the hose so you don't have to fight to get it to operate. Plus, a durable full-flow swivel to maximize material flow with minimal pressure drop. See for yourself why Graco hose reels out-perform the competition.

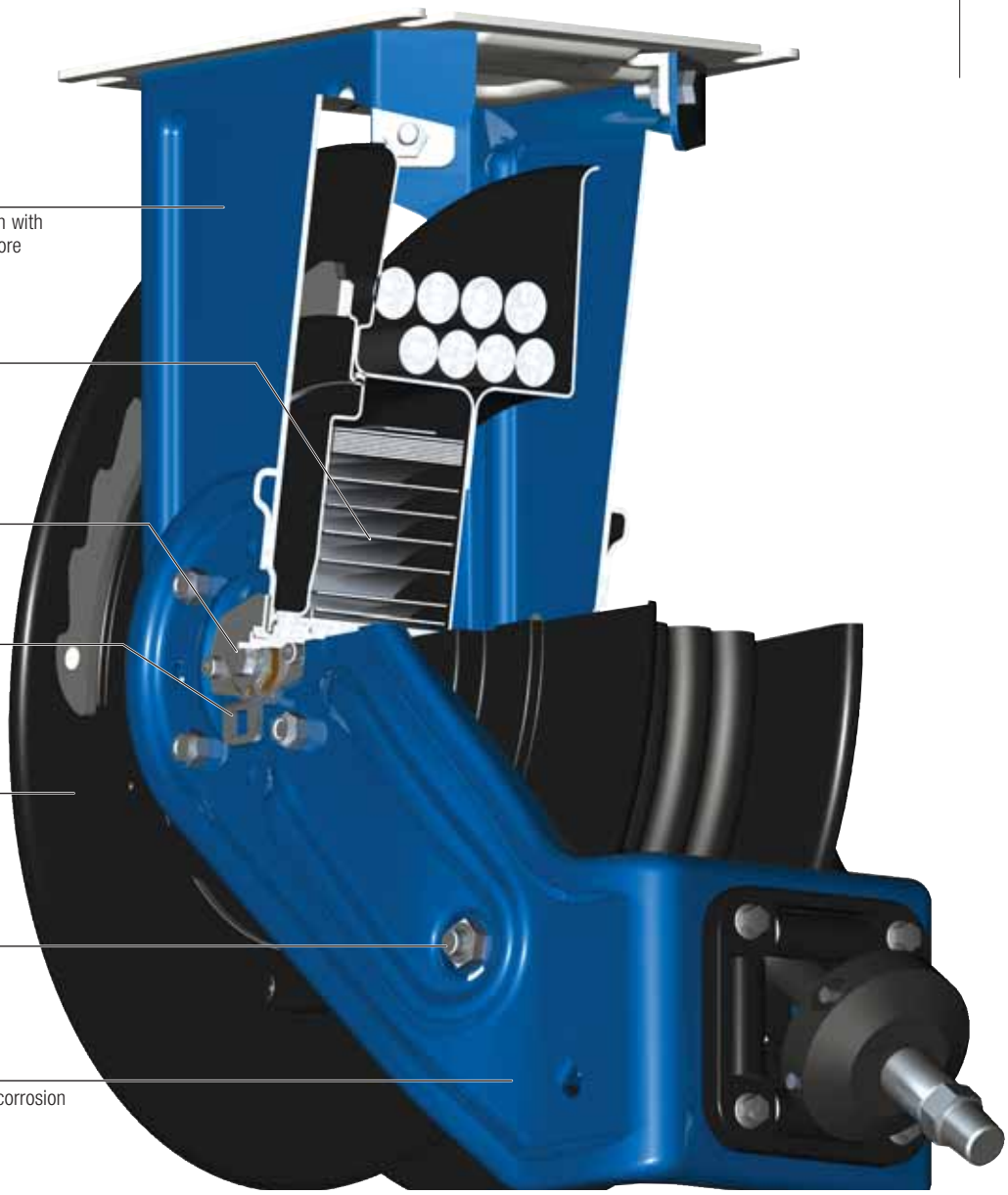

Single or Dual Pedestal Options

Heavy-duty, high-strength steel construction with rolled edges and ribbed stress points for more strength than ever before

Improved High-Demand Spring

Long-life spring extends and retracts with constant force to reduce user fatigue

Full-Flow Swivel

Maximize material flow with minimal pressure drop

Spring Adjustment

Increase or decrease spring tension while reel is pressurized with fluid (LD Enclosed and XD models)

Larger Hose Capacity with Smaller Profile

Compact pedestal and spool fits into tight spaces and can accommodate 35-65 foot (10-20 meters) hose capacity for a wide variety of applications

Improved Latch Design

No more frustrating lock-out at full hose extension

Durable Finish in More Colors

Baked-on enamel finish protects reel from corrosion for longer life–now available in six colors

XD model shown

Standard color: metallic blue.

Additional five colors available. Consult factory for lead times.

Three New Families of Hose Reels

LD Series

Entry level enclosed hose reels designed for light-duty applications

- Easy, Quick Installation
- Flexible Mounting Options
- Indoor Use

Markets

- Small Maintenance Shops
- Tire/Muffler Shops
- Small Fast Lubes
- Independent Repair Facilities
- Industrial Manufacturing Facilities

SD Series

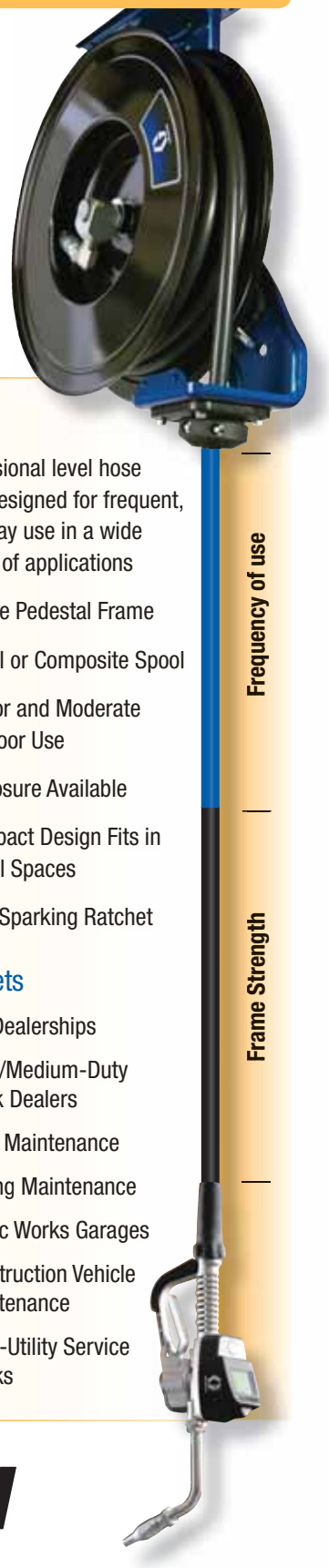

Professional level hose reels designed for frequent, everyday use in a wide variety of applications

- Single Pedestal Frame
- Metal or Composite Spool
- Indoor and Moderate Outdoor Use
- Enclosure Available
- Compact Design Fits in Small Spaces
- Non-Sparking Ratchet

Markets

- Car Dealerships
- Light/Medium-Duty Truck Dealers
- Fleet Maintenance
- Mining Maintenance
- Public Works Garages
- Construction Vehicle Maintenance
- Light-Utility Service Trucks

XD Series

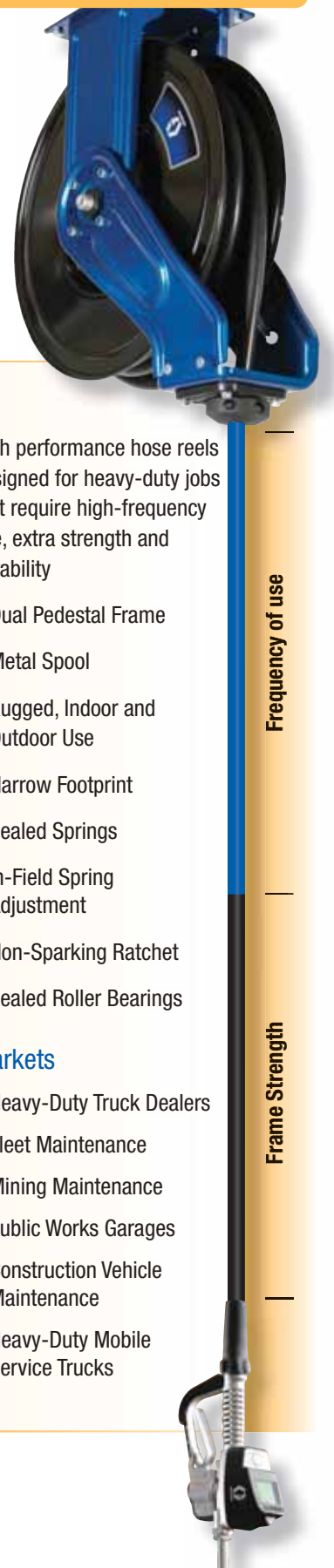

High performance hose reels designed for heavy-duty jobs that require high-frequency use, extra strength and durability

- Dual Pedestal Frame
- Metal Spool
- Rugged, Indoor and Outdoor Use
- Narrow Footprint
- Sealed Springs
- In-Field Spring Adjustment
- Non-Sparking Ratchet
- Sealed Roller Bearings

Markets

- Heavy-Duty Truck Dealers
- Fleet Maintenance
- Mining Maintenance
- Public Works Garages
- Construction Vehicle Maintenance
- Heavy-Duty Mobile Service Trucks

BUILT GRACO TOUGH

Simple to Install–Mounts in Minutes!

Hose Reels

LD Enclosed

Enclosed hose reel comes with ceiling/wall mounting swivel bracket. Required inlet hose kit sold separately.

Features

- Designed for light-duty applications
- Enclosed for safety and protection, extends hose life
- Flexible mounting options–hang on wall or ceiling; bench, table or tank top-mount options available
- Full-flow swivel maximizes fluid flow with minimal pressure drop
- Easy spring tension adjustment–increase or decrease pressure spring tension while reel is pressurized

Dimensions

LD SERIES	
A	7.1 in (180 mm)
B	23.0 in (585 mm)
C	18.5 in (470 mm)
D	25.6 in (650 mm)

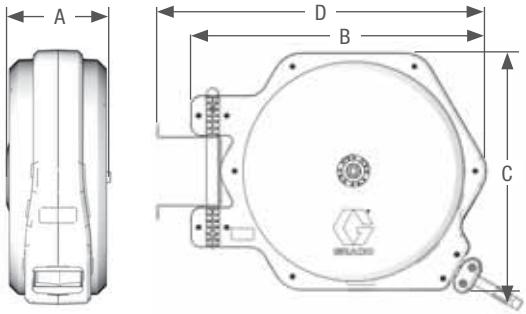

Ordering Information / Technical Specifications

APPLICATION	MODEL NUMBERS	PRESSURE Psi (bar)	HOSE ID x Length		CONNECTION SIZE Inlet bspt(m) x Outlet bspt(m)	OPERATING TEMP.	WETTED PARTS	WEIGHT
Air Only	HEL13D	250 (17.2)	6 mm x 11 m	1/4 in x 35 ft	1/2 in x 1/4 in	14–140 ºF (-10–60 ºC)	Aluminum, Buna-N, Rubber, PVC	9 kg (19.8 lb)
	HEL15D	250 (17.2)	6 mm x 15 m	1/4 in x 50 ft				9.5 kg (21 lb)
Air/Water	HEL23D	250 (17.2)	10 mm x 11 m	3/8 in x 35 ft	1/2 in x 3/8 in	0–140 ºF (-17–60 ºC)	Aluminum, Buna-N, Rubber	10.4 kg (23 lb)
	HEL25D	250 (17.2)	10 mm x 15 m	3/8 in x 50 ft	1/2 in x 3/8 in			11 kg (24.25 lb)
	HEL33D	250 (17.2)	12 mm x 11 m	1/2 in x 35 ft	1/2 in x 1/2 in			10.5 kg (23.1 lb)
	HEL34D	250 (17.2)	12 mm x 14 m	1/2 in x 45 ft	1/2 in x 1/2 in			11 kg (24.25 lb)
Petroleum– and Synthetic–based Oils	HEM23D	1800 (124)	10 mm x 11 m	3/8 in x 35 ft	1/2 in x 3/8 in		Carbon Steel, Buna-N, Rubber, UHMWPE	11.4 kg (25.1 lb)
	HEM33D	1800 (124)	12 mm x 11 m	1/2 in x 35 ft	1/2 in x 1/2 in			14 kg (38.8 lb)
Grease	HEH13D	5000 (345)	6 mm x 11 m	1/4 in x 35 ft	3/8 in x 1/4 in			13.2 kg (29.1 lb)

Instruction Manual = 313938

LD Enclosed Hose Reel Packages

PACKAGE NUMBER	LD ENCLOSED REEL	HOSE INLET KIT	VALVE/METER
24D197	HEM33D	24C538	256215, LDM5 Rigid with trigger guard
24D198	HEM33D	24C538	255751, LDM5 Flex without trigger guard
24D199	HEM33D	24C538	256216, LDP5 Rigid with trigger guard
24D200	HEM33D	24C538	255277, LDP5 Flex without trigger guard

Professional Performance at an Entry-Level Price

Hose Reels

SD Composite Spool

Single pedestal with composite spool. Inlet Hose Kit sold separately.

Features

- Designed for standard-duty applications such as small service garages and repair shops
- Structurally reinforced frame doesn't flex when handling hose
- Guide arm position easily changes for mounting on bench, ceiling or wall
- Enamel finish protects the reel from the environment
- Lightweight composite spool made from high strength resins resists dents and corrosion
- Compact design easily fits inside tool bench or cabinet
- Enclosure kits available–ideal when appearance and protection is important
- Available in six colors. Metallic blue is standard.

Dimensions

LD SERIES	
A	7.0 in (177 mm)
B	18.1 in (460 mm)
C	23.4 in (594 mm)
D	19.2 in (488 mm)
E	21.8 in (554 mm)
F	25.2 in (640 mm)

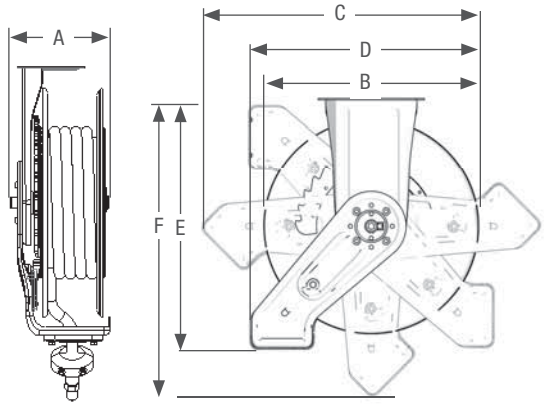

Ordering Information / Technical Specifications

APPLICATION		MODEL NUMBERS BY COLOR						PRESSURE	HOSE		CONNECTION SIZE	
		Metallic Blue	White	Red	Black	Dark Blue	Yellow	Psi (bar)	ID in	Length ft (m)	Inlet npsm(m)	Outlet
Air, Water, Anti-freeze, Windshield Washer Fluid	SIZE 20	HRL56B	HRL56A	HRL56C	HRL56D	HRL56E	HRL56F	300 (20.7)	3/8	65 (20)	1/2	3/8 npt(m)
		HRL65B	HRL65A	HRL65C	HRL65D	HRL65E	HRL65F		1/2	50 (15)		1/2 npt(m)
Petroleum– and Synthetic–based Oils		HRM65B	HRM65A	HRM65C	HRM65D	HRM65E	HRM65F	2,000 (138)	1/2	50 (15)	1/2	1/2 npt(m)
Grease		HRH55B	HRH55A	HRH55C	HRH55D	HRH55E	HRH55F	4,000 (276)	3/8	50 (15)	3/8	1/4 npt(m)

Maximum dry weight with hose: 44 lbs (20 kg)
Operating Temp: Air, Water, Anti-Freeze, Windshield Washer Fluid and Oil = -20–190 ºF (-28–87 ºC), **Grease** = -40–200 ºF (-40–93 ºC)
Wetted parts–bare hose reel only: zinc plated steel, anodized aluminum, nitrile rubber.
Instruction Manual = 313431

SD Hose Reel Packages with Enclosure Kit

SD PACKAGES	HOSE REEL	HOSE INLET KIT	WHITE ENCLOSURE	DISPENSE VALVE
24B812	HRL56B	218549	24A218	–
24B813	HRL56B	218549	24A218	218545
24B814	HRL56B	218549	24A218	180685/150287
24B815	HRM65B	218549	24A218	–
24B816	HRH55B	218550	24A218	–

Everyday Workhorse–Metal Spool for Extra Durability

SD Steel Spool

Single pedestal with metal spool. Inlet Hose Kit sold separately.

Features

- Designed for daily use applications such as dealerships, fleet service and maintenance facilities
- Structurally engineered frame made from high strength steel won't bend or flex
- Long-lasting spring provides constant spring torque through the entire range of motion
- Flexible positioning of guide arm for mounting on bench or ceiling, wall or utility truck
- Steel spool for demanding applications
- Open swivel ports ensure high fluid flow with minimal pressure loss
- Enclosure kits available–ideal when appearance and protection is important
- Available in six colors. Metallic blue is standard.

Dimensions

SD SERIES SIZE 10	
A	7.0 in (177 mm)
B	16.2 in (412 mm)
C	21.0 in (533 mm)
D	17.1 in (435 mm)
E	19.5 in (495 mm)
F	22.5 in (571 mm)

SD SERIES SIZE 20	
A	7.0 in (177 mm)
B	18.1 in (460 mm)
C	23.4 in (594 mm)
D	19.2 in (488 mm)
E	21.8 in (554 mm)
F	25.2 in (640 mm)

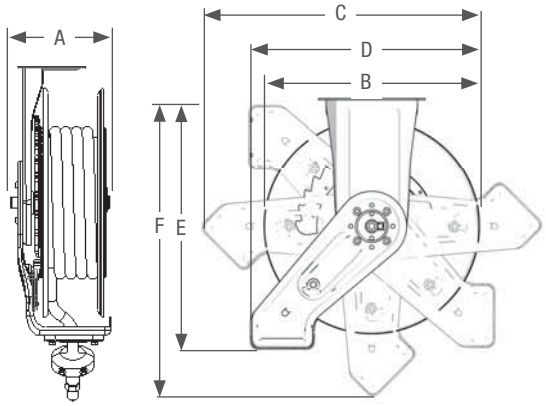

SD Series

Ordering Information / Technical Specifications

APPLICATION		MODEL NUMBERS BY COLOR						PRESSURE	HOSE		CONNECTION SIZE	
		Metallic Blue	White	Red	Black	Dark Blue	Yellow	Psi (bar)	ID in	Length ft (m)	Inlet in	Outlet in
Air, Water, Anti-freeze, Windshield Washer Fluid	SIZE 10	HPL23B	HPL23A	HPL23C	HPL23D	HPL23E	HPL23F	300 (20.7)	3/8	35 (11)	1/2 npsm(m)	3/8 npt(m)
		HPL25B	HPL25A	HPL25C	HPL25D	HPL25E	HPL25F			50 (15)		
		HPL33B	HPL33A	HPL33C	HPL33D	HPL33E	HPL33F		1/2	35 (11)		1/2 npt(m)
	SIZE 20	HPL56B	HPL56A	HPL56C	HPL56D	HPL56E	HPL56F		3/8	65 (20)		3/8 npt(m)
		HPL65B	HPL65A	HPL65C	HPL65D	HPL65E	HPL65F		1/2	50 (15)		1/2 npt(m)
Petroleum– and Synthetic–based Oils	SIZE 10	HPM33B	HPM33A	HPM33C	HPM33D	HPM33E	HPM33F	2,000 (138)	1/2	35 (11)	1/2 npsm(m)	1/2 npt(m)
		HPM3BB*	HPM3BA*	HPM3BC*	HPM3BD*	HPM3BE*	HPM3BF*					1/2 npsm(f)
	SIZE 20	HPM65B	HPM65A	HPM65C	HPM65D	HPM65E	HPM65F			50 (15)		1/2 npt(m)
		HPM6DB*	HPM6DA*	HPM6DC*	HPM6DD*	HPM6DE*	HPM6DF*					1/2 npsm(f)
Grease	SIZE 10	HPH15B	HPH15A	HPH15C	HPH15D	HPH15E	HPH15F	5,000 (345)	1/4	50 (15)	3/8 npsm(m)	1/4 npt(m)
		HPH23B	HPH23A	HPH23C	HPH23D	HPH23E	HPH23F	4,000 (276)	3/8	35 (11)		
		HPH1DB*	HPH1DA*	HPH1DC*	HPH1DD*	HPH1DE*	HPH1DF*	5,000 (345)				3/8 npt(f)
	SIZE 20	HPH55B	HPH55A	HPH55C	HPH55D	HPH55E	HPH55F	4,000 (276)		50 (15)		1/4 npt(m)
		HPH5DB*	HPH5DA*	HPH5DC*	HPH5DD*	HPH5DE*	HPH5DF*	5,000 (345)				3/8 npt(f)

* Bare Reel–hose sold separately

Maximum dry weight weight with hose: SD10 = 47 lbs (21 kg), SD20 = 52 lbs (23.6 kg)
Wetted parts–bare hose reel only: zinc plated steel, steel, nitrile rubber
Operating temperature for air, water, windshield washer fluid and oil = -20–190 ºF (-28–87 ºC) **Operating temperature for grease** = -40–200 ºF (-40–93 ºC)
Instruction Manual = 313431

SD Hose Reel Packages with Enclosure Kit

SD Packages	Hose Reel	Hose Inlet Kit	White Enclosure	Dispense Valve/Meter	Fitting
24D989	HPL23B	218549	24A217	–	–
24D990	HPL25B	218549	24A217	–	–
24D991	HPL33B	218549	24A217	–	–
24D992	HPL23B	218549	24A217	218545	–
24D993	HPL23B	218549	24A217	180685	150287
24D994	HPL33B	218549	24A217	180685	159842
24D995	HPM33B	218549	24A217	–	–
24D996	HPM33B	218549	24A217	255350	–
24D997	HPM33B	218549	24A217	255348	–

SD Hose Reel Packages

SD Packages	Hose Reel	Hose Inlet Kit	Enclosure	Dispense Valve/Meter	Fitting
24D998	HPL23B	218549	–	218545	–
24D999	HPL23B	218549	–	180685	150287
24E001	HPM33B	218549	–	255350	–
24E002	HPM33B	218549	–	255348	–

Extreme Performer in Three Sizes

XD Series

Size 10

XD Series Features

- Designed for robust/heavy-duty applications such as mobile lube trucks or large equipment service, yet with a narrow footprint to fit more reels into small spaces
- Dual pedestal frame provides increased strength for extreme-duty applications
- Long lasting spring is sealed for protection against the weather
- Durable steel spool rides on sealed roller bearings to ensure trouble-free performance
- Available in four colors. Metallic blue is standard.
- Available with arms removed for bulkhead mounting*

** Contact your local distributor for more information*

Size 20

Dimensions

XD SERIES SIZE 10	
A	7.5 in (196 mm)
B	16.2 in (412 mm)
C	21.0 in (533 mm)
D	18.0 in (457 mm)
E	18.5 in (470 mm)
F	22.5 (571 mm)

XD SERIES SIZE 20	
A	7.5 in (196 mm)
B	18.1 in (460 mm)
C	23.4 in (594 mm)
D	20.0 in (508 mm)
E	21.0 in (533 mm)
F	25.2 in (640 mm)

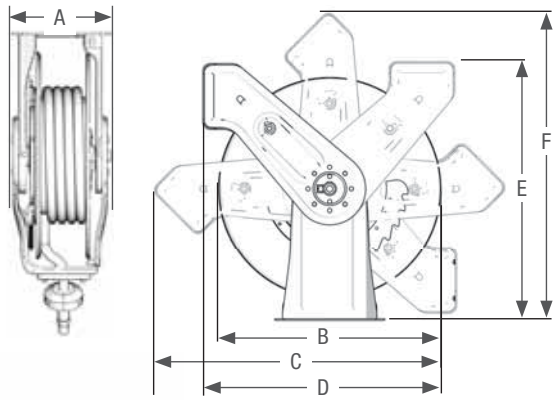

Size 30

XD SERIES SIZE 30	
A	9.0 in (229 mm)
B	21.50 in (546.00 mm)
C	25.96 in (659.45 mm)
D	22.12 in (561.73 mm)
E	23.10 in (588.00 mm)
F	27.60 in (700.82 mm)

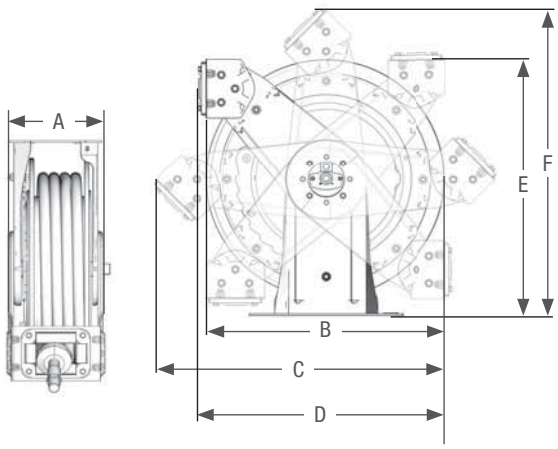

XD Series

Ordering Information / Technical Specifications

APPLICATION		PART NUMBERS BY COLOR				PRESSURE	HOSE		CONNECTION SIZE		OPERATING TEMP.
		Metallic Blue	White	Yellow	Desert Sand	Psi (bar)	ID in	Length ft (m)	Inlet in	Outlet in	
Air, Water, Anti-freeze, Windshield Washer Fluid	SIZE 10	HSL25B	HSL25A	HSL25F	HSL25G	300 (20.7)	3/8	50 (15)	1/2 npsm(m)	3/8 npt(m)	-20–190 ºF (-28–87 ºC)
		HSL33B	HSL33A	HSL33F	HSL33G	300 (20.7)	1/2	35 (11)		1/2 npt(m)	
	SIZE 20	HSL56B	HSL56A	HSL56F	HSL56G	300 (20.7)	3/8	65 (20)		3/8 npt(m)	
		HSL65B	HSL65A	HSL65F	HSL65G	300 (20.7)	1/2	50 (15)		1/2 npt(m)	
	SIZE 30	HSLC8B	HSLC8A	HSLC8F	HSLC8G	300 (20.7)		75 (23)			-40–180 ºF (-40–82 ºC)
		HSLD5B	HSLD5A	HSLD5F	HSLD5G	300 (20.7)	3/4	50 (15)	3/4 npsm(m)	3/4 npt(m)	
Petroleum– and Synthetic–based Oils	SIZE 10	HSM33B	HSM33A	HSM33F	HSM33G	2,000 (138)	1/2	35 (11)	1/2 npsm(m)	1/2 npt(m)	-20–190 ºF (-28–87 ºC)
		HSM3BB*	HSM3BA*	HSM3BF*	HSM3BG	2,000 (138)	1/2	35 (11)		1/2 npt(f)	
	SIZE 20	HSM65B	HSM65A	HSM65F	HSM65G	2,000 (138)	1/2	50 (15)		1/2 npt(m)	
		HSM6DB*	HSM6DA*	HSM6DF*	HSM6DG	2,000 (138)	1/2	50 (15)		1/2 npt(f)	
	SIZE 30**	HSMC8B	HSMC8A	HSMC8F	HSMC8G	1,500 (103)	1/2	75 (23)		1/2 npt(m)	-40–180 ºF (-40–82 ºC)
		HSMCFB*	HSMCFA*	HSMCFF*	HSMCFG*	2,000 (138)	1/2	75 (23)		1/2 npsm(f)	
		HSMD5B	HSMD5A	HSMD5F	HSMD5G	1,250 (86)	3/4	50 (15)	3/4 npsm(m)	3/4 npt(m)	
		HSMDDB*	HSMDDA*	HSMDDF*	HSMDDG*	2,000 (138)	3/4			3/4 npsm(f)	
Grease	SIZE 10	HSH15B	HSH15A	HSH15F	HSH15G	5,000 (345)	1/4	50 (15)	3/8 npsm(m)	1/4 npt(m)	-40–200 ºF (-40º–93 ºC)
		HSH1DB*	HSH1DA*	HSH1DF*	HSH1DG*	5,000 (345)	3/8	35 (11)		3/8 npt(f)	
	SIZE 20	HSH55B	HSH55A	HSH55F	HSH55G	4,000 (276)		50 (15)		1/4 npt(m)	
		HSH5DB*	HSH5DA*	HSH5DF*	HSH5DG*	5,000 (345)				3/8 npsm(f))	
	SIZE 30**	HSHC5B	HSHC5A	HSHC5F	HSHC5G	5,000 (345)	1/2		1/2 npsm(m)	1/2 npt(m)	-40–180 ºF (-40–82 ºC)
		HSHCDB*	HSHCDA*	HSHCDF*	HSHCDG*	5,000 (345)				1/2 npsm(f)	
Pressure Wash	SIZE 30	HSPB8B	HSPB8A	HSPB8F	HSPB8G	4,000 (276)	3/8	75 (23)	1/2 npsm(m)	3/8 npt(m)	-20–225 ºF (-28–107 ºC)
		HSHFFB*	HSHFFA*	HSHFFF*	HSHFFG*	4,000 (276)				3/8 npsm(f)	
Fuel/Evacuation	SIZE 30	HSLE3B	HSLE3A	HSLE3F	HSLE3G	125 (8.6)	1	30 (9)	3/4 npsm(m)	1 npt(m)	-40–120 ºF (-40–49 ºC)

Maximum dry weight with hose: XD10 = 54 lbs (24.5 kg), XD20 = 59 lbs (27 kg), XD30 = 98 lbs (44.5 kg)
Wetted parts–Bare hose reel only: zinc plated steel, anodized aluminum, nitrile rubber
Instruction Manuals: XD10 and XD20: 313431, XD30: 3A0138
* Bare reel–hose sold separately
** Maximum installed height is 7 feet (2.13 meters).

SD and XD Hose Reel Accessories

Retrofit Bracket to 500 Series

Mounting Bracket

Ball Stop Kit

Hose Inlet Kit for SD and XD open reels

Reel Enclosures

- Designed for enclosing SD single pedestal reels
- Enclosures provide protection to extend the life of hoses and bearings

ENCLOSURE KITS FOR ONE REEL	PART NUMBERS BY COLOR					
	White*	Metallic Blue	Red	Black	Dark Blue	Yellow
Size 10 Enclosure	24A217	24A940	24A941	24A942	24A943	24A944
Size 20 Enclosure	24A218	24A945	24A946	24A947	24A948	24A949
Size 10 End Caps (2)	–	–	–	24A950	–	–
Size 20 End Caps (2)	–	–	–	24A951	–	–

* White enclosures available for immediate shipment. Consult factory for lead-time for other colors.

Mounting Channels

Enclosure mounting channels accommodate one, two, three, four, five or six reels (includes all parts needed to mount hose reels to walls or ceilings)

DESCRIPTION	MOUNTING CHANNEL					
	1 Reel	2 Reels	3 Reels	4 Reels	5 Reels	6 Reels
SD10/SD20 Open	24A934	24A935	24A936	24A937	24A938	24A939
XD10/XD20 Open	24A219	24A220	24A221	—	—	24A222
SD Enclosed	203521	203522	203523	203524	203525	203526

Retrofit Adapter Kits

24A224	Includes all parts to mount hose reel to existing 500 series mounting pattern
24C100	Includes all parts to convert SD10 hose reels to fit existing 250 series enclosures

Mounting Bracket

204741	Secures mounting channel to I-beam without drilling. Two brackets are required for 1-3 hose reels; three brackets for 4-6 hose reels.

Ball Stop Kits

PART NUMBER	TYPICAL HOSE ID
222225*	For 1/4 in (6.4 mm) i.d. hose
218340*	For 1/4-3/8 in (6.4-9.5 mm) i.d. hose
218341*	For 3/8-1/2 in (9.5-12.7 mm) i.d. hose
237873	For 3/4 in (19 mm) i.d. hose
237874	For 1 in (25 mm) i.d. hose
24D132	For 3/8 in (9.5 mm) o.d. hose
24D133	For 1/2 in (12.7 mm) o.d. hose

*Not for use with XD30 reels

Hose Inlet Kits

FOR SD AND XD REELS

PART NUMBER	DESCRIPTION	PRESSURE psi (bar)	HOSE I.D. in (mm)	LENGTH in (mm)	HOSE INLET
218549	Low /medium pressure	2000 (137)	1/2 (12)	24 (610)	npt(m)
218550	High pressure	4000 (276)	3/8 (10)	24 (610)	npt(m)
222417	High pressure	5000 (345)	1/4 (6)	24 (610)	npt(m)

LD Enclosed Hose Reel Accessories

Tote, Bench or Wall Mount Post 24C772

Ceiling/Wall Stationary Bracket 24E506

Hose Inlet Kit for LD enclosed reels

Mounting Brackets

Includes all parts to mount reel on wall or ceiling; bench, table or tank top-mount

PART NUMBER	MOUNTING OPTIONS
24C772	Tote, Bench or Wall Mount Post
24E506	Fixed Installation Kit

Ceiling/Wall Swivel Mount (standard)

Ceiling/Wall Stationary Mount (optional)

Tote, Bench or Wall Mount Post (optional)

Hose Inlet Kits for LD Enclosed Hose Reel

	PART NUMBER	HOSE INLET DESCRIPTION	FITS REEL	PRESSURE PSI (BAR)	HOSE ID in (mm)	LENGTH in (mm)	HOSE INLET in	HOSE OUTLET in
FOR BSP CONNECTIONS	24C437	Air	HEL13D	250 (17.2)	1/4 (6)	36 in (915)	1/4 bspt(m)	1/4 bspt(m)
			HEL15D	250 (17.2)	1/4 (6)			
	24C438	Air/ water	HEL23D	250 (17.2)	1/2 (12)		1/2 bspt(m)	3/8 bspt(m)
			HEL25D	250 (17.2)	1/2 (12)		1/2 bspt(m)	3/8 bspt(m)
			HEL33D	250 (17.2)	1/2 (12)		1/2 bspt(m)	1/2 bspt(m)
			HEL34D	250 (17.2)	1/2 (12)		1/2 bspt(m)	1/2 bspt(m)
	24C440	Oil	HEM23D	1,800 (124)	1/2 (12)		1/2 bspt(m)	3/8 bspt(m)
			HEM33D	1,800 (124)	1/2 (12)		1/2 bspt(m)	1/2 bspt(m)
	24C442	Grease	HEH13D	5,000 (345)	1/4 (6)		1/4 bspt(m)	1/4 bspt (m)
FOR NPT CONNECTIONS	24C443	Air	HEL13D	250 (17.2)	1/4 (6)		1/4 npt(m)*	1/4 npt(m)*
			HEL15D	250 (17.2)			1/4 npt(m)*	1/4 npt(m)*
	24C444	Air/water	HEL23D	250 (17.2)	1/2 (12)		1/2 npt(m)*	3/8 npt(m)*
			HEL25D	250 (17.2)	1/2 (12)		1/2 npt(m)*	3/8 npt(m)*
	24C445		HEL33D	250 (17.2)	1/2 (12)		1/2 bspt(m)	1/2 bspt(m)
			HEL34D	250 (17.2)	1/2 (12)		1/2 bspt(m)	1/2 bspt(m)
	24C537	Oil	HEM23D	1,800 (124)	1/2 (12)		1/2 npt(m)*	1/2 npt(m)*
	24C538		HEM33D	1,800 (124)	1/2 (12)		1/2 npt(m)*	1/2 npt(m)*
	24C539	Grease	HEH13D	5,000 (345)	1/4 (6)		1/4 npt(m)*	1/4 npt(m)*

* NPT hose connection when using BSP to NPT adapter (included)

ABOUT GRACO

PROVEN QUALITY. LEADING TECHNOLOGY.

Founded in 1926, Graco is a world leader in fluid handling systems and components. Graco products move, measure, control, dispense and apply a wide range of fluids and viscous materials used in vehicle lubrication, commercial and industrial settings.

The company's success is based on its unwavering commitment to technical excellence, world-class manufacturing and unparalleled customer service. Working closely with qualified distributors, Graco offers systems, products and technology that set the quality standard in a wide range of fluid handling solutions. Graco provides equipment for spray finishing, protective coating, paint circulation, lubrication, and dispensing sealants and adhesives, along with power application equipment for the contractor industry. Graco's ongoing investment in fluid management and control will continue to provide innovative solutions to a diverse global market.

GRACO LOCATIONS

MAILING ADDRESS
P.O. Box 1441
Minneapolis, MN 55440-1441
Tel: 612-623-6000
Fax: 612-623-6777

AMERICAS

MINNESOTA
Worldwide Headquarters
Graco Inc.
88-11th Avenue N.E.
Minneapolis, MN 55413

EUROPE

BELGIUM
European Headquarters
Graco N.V.
Industrieterrein-Oude Bunders
Slakweidestraat 31
3630 Maasmechelen,
Belgium
Tel: 32 89 770 700
Fax: 32 89 770 777

ASIA PACIFIC

AUSTRALIA
Graco Australia Pty Ltd.
Suite 17, 2 Enterprise Drive
Bundoora, Victoria 3083
Australia
Tel: 61 3 9467 8558
Fax: 61 3 9467 8559

CHINA
Graco Hong Kong Ltd.
Shanghai Representative Office
Room 118 1st Floor
No.2 Xin Yuan Building
No.509 Cao Bao Road
Shanghai, 200233
The People's Republic of China
Tel: 86 21 649 50088
Fax: 86 21 649 50077

INDIA
Graco Hong Kong Ltd.
India Liaison Office
Room 432, Augusta Point
Regus Business Centre 53
Golf Course Road
Gurgaon, Haryana
India 122001
Tel: 91 124 435 4208
Fax: 91 124 435 4001

JAPAN
Graco K.K.
1-27-12 Hayabuchi
Tsuzuki-ku
Yokohama City, Japan 2240025
Tel: 81 45 593 7300
Fax: 81 45 593 7301

KOREA
Graco Korea Inc.
Shinhan Bank Building
4th Floor #1599
Gwanyang-Dong, Dongan-Ku,
Anyang-si, Korea 431-060
Tel: 82 31 476 9400
Fax: 82 31 476 9801

SALES/ DISTRIBUTION/ SERVICE

Call today for product information or to request a demonstration.

877-84GRACO (1-877-844-7226) or visit us at www.graco.com.

Graco Inc. is registered to I.S. EN ISO 9001

North America
Customer Service
800-533-9655
Fax 800-533-9656

©2009, 2010 Graco Inc. 340309 Rev. C 3/10 All written and visual data contained in this document are based on the latest product information available at the time of publication. Graco reserves the right to make changes at any time without notice. All other brand names or marks are used for identification purposes and are trademarks of their respective owners.

Vehicle Service Equipment Buyer's Guide

Fluid Handling Equipment for Industrial and Commercial Applications

Construction | Fleets and Transportation | Industrial | Mining | Energy | Agriculture

PROVEN QUALITY. LEADING TECHNOLOGY.

Table of Contents

Page

About Graco 4-6
Graco Resources 6

Fluid Management Systems

Fluid Management System Selection Guide 9
Benefits of Pulse™ Pro Fluid Management 10
Steps to Build Your Pulse Pro System 11
Pulse Hub 12-13
Pulse Dispense Meter 14-15
Pulse Tank Level Monitor (TLM) 16
Pulse Pump Air Control (PAC) 17
Pulse Extender and Remote Extender 18
Pulse Roll Around Package and Accessories 19
Steps to Build Your Pulse FC System 20
Pulse FC Software 21
Pulse FC Starter Kit 22
SD™ Preset Dispense Meters 23-24
Pulse FC Packages and Accessories 25
Pulse Level Fluid Management 26-28
Traditional Box – Wired Fluid Control Components 29

Oil Pumps

Oil Pump Selection Guide 32-33
LD Series™ Oil Pumps 34-49
LD Series™ Oil Pump Accessories 50-51
Mini Fire-Ball® 225 Oil Pumps 52-55
Fire-Ball® 300 Oil Pumps 56-60
Fire-Ball® 425 Oil Pumps 61-64
Fast-Ball® Oil Pumps 65-66
Oil Pump Accessories 67-72
NXT™ High-Flo® Oil Pumps 73-75
NXT Dura-Flo® Oil Pumps 76-79
Dyna-Star® Hydraulic Oil Pumps 80-81
Power-Star™ Hydraulic Oil Pumps 82-83
Manually Operated Oil Pumps 84-85

Oil Meters

Graco Dispense Meters 88
LDP5 Electronic Preset Meters 89-91
EM® Series Electronic Meters 92-94
PM® Series Electronic Meters 95-97
SD Series™ Electronic Meters 98-100
IM20 In-Line Electronic Meter 101
IM20P In-Line Electronic Meter 102
SDI15 In-Line Electronic Meter 103
Mechanical Meters 104-106
SDV15 Control Valve 107-108
XDV20 Control Valve 109-110
Dispense Consoles 111-112

Grease Pumps

Grease Pump Selection Guide 114-115
LD Series™ Grease Pumps 116-120
LD Series™ Grease Pump Accessories 121-122
Mini Fire-Ball® 225 Grease Pumps 123-126
Fire-Ball® 300 Grease Pumps 127-134
Fire-Ball® 425 Grease Pumps 135-141
Grease Pump Accessories 142-145
GT 750 36:1 Grease Pumps 146-147
NXT™ Check-Mate® Grease Pumps 148-152
Dyna-Star® Hydraulic Grease Pumps 153-154
Viscount® II Grease Pumps 155-156
Manually-Operated Grease Pumps 157

Grease Dispense Valves and Guns

Dispense Valve and Gun Selection Guide 158
Accu Shot™ Metered Grease Valve 159
Pro Shot™ Non-Metered Valve 160
Power Shot™ Booster Valve 161
Heavy-Duty Grease Guns 162
Accessories 163-165

Page

Diesel Exhaust Fluid (DEF) Systems

How to Choose Your Graco DEF Solution 168
LD Blue Electric Pumps and Packages 169-171
SD Blue AODD Pumps and Packages 172-174
LD Blue Manual Pumps 175
DEF Meters 176-177
DEF Dispense Nozzles 178-179
DEF Hose Reels 180-181
DEF System Accessories 182-186

Specialty Pumps

Diaphragm Pump Selector 188
Husky 1050 AODD Pump 189-190
Husky 307 AODD Pump 191
Husky 515 AODD Pump 192
Husky 716 AODD Pump 193
Husky 1590 AODD Pump 194
Husky 2150 AODD Pump 195
Husky 3300 AODD Pump 196
Diaphragm Pump Packages 197-198
Diaphragm Pump Accessories 199-200
Undercoating and Rustproofing Pumps 201-202
Undercoating and Rustproofing Pump Packages 203-204
Undercoating and Rustproofing Accessories 205
Bulldog® 43:1 Oil Pump 206-207
Fast-Flo® 1:1 Pumps 208-209
Fast-Flo 1:1 Pump Accessories 210-211
EGP™ Transfer and EGP™ On-Demand Pumps 212-214

Hose and Cord Reels

Hose Reel Selection Guide 216
LD™ Series Enclosed Hose Reels 218-220
LDX™ Series Hose Reels 221-222
SDX™ Series Hose Reels 223-228
SD™ Series Cord and Light Reels 229-232
XDX™ Series 10/20 Hose Reels 233-237
XD™ Series 30 Hose Reels 238-242
XD™ Series 40/50 Hose Reels 243-248
XD™ Series 60/70/80 Powered Hose Reels 250-259
Hose Reel Accessories 260-261

Fluid Reclaim Equipment

Oil King™ 264
Coolant King™ 265
Oil Ace™ 266-268
16-Gallon Mobile Receiver 269
Big Hauler™ Truck Drain 270
Track Receivers 270
Diaphragm Evacuation Pumps 271
Evacuation Pump Packages 272-274
Fluid Reclaim Accessories 275-277

Accessories

Air Regulators and Valves 280
Air Valves 281
Hose Fittings 282
Lubrication Hoses 283
Air/Water Hoses 284
Quick Connect Fittings 285
Adapters and Fittings 286-287

Warranty Information 288-290

Index 291-298

About Graco

Established in 1926, Graco has built a worldwide reputation for high quality, reliable and technically advanced products, world-class manufacturing and outstanding customer service. Headquartered in Minneapolis, Minnesota, Graco works closely with distributors around the world to offer innovative products that set the quality standard for spray finishing, paint circulation, lubrication, sealant and adhesives dispensing, process application and contractor power equipment. These best-in-class products are manufactured in the U.S. and China and supplied through our distribution centers around the world. Every day, Graco's fluid-handling equipment and systems move, measure, mix, control, dispense and spray a variety of fluids and materials.

Lubrication Equipment Division

From the first air-powered grease gun to our industry-leading Fire-Ball pump, Graco's Lubrication Equipment Division is what started it all. We manufacture equipment to monitor, control, manage and dispense fluids. Offering innovative equipment for all your vehicle services, industrial and automatic lubrication needs. We offer a full range of high-quality pumps, meters, valves, hose reels and accessories to increase production and reduce waste and downtime.

Graco offers a full line of quality equipment to meet the varying needs of vehicle maintenance and repair. Streamline your workflow and move more lubricants through your shop. We offer reliable, high-quality equipment you can depend on for fuel, diesel, antifreeze, oil and grease. Our versatile fluid inventory control and management systems are designed to accurately track the use of oil, grease and other automotive fluids at vehicle maintenance facilities, and our lubrication equipment ensures you deliver fluids to the right spot in your shop. From light-duty applications to high-performance concepts designed for heavy-duty jobs, our equipment is known for its rugged, durable and long-life design.

More than **3,300** distribution partners offer local service and support in more than **100** countries all over the world

Machining is a core competency of Graco – it enables complete control of the component parts needed to ensure precise metering, reliable dispensing and fluid movement.

When it comes to **research and development**, Graco is one step ahead, ensuring we offer the best possible solutions. To guarantee superior quality and to meet the changing requirements of your markets, we prioritize investing resources in research and development. Innovative technologies and extensive field testing are a natural part of our process to develop new products. Also, every aspect of our production is subject to constant testing and evaluation. It's the foundation to deliver products with long service life and low cost of ownership. The insurance to help you grow your business.

We understand our customers. We build a partnership, working and striving towards new solutions, together. We are at the service of our distribution partners, supporting you along the way. Look at Graco not just as a manufacturer or supplier but as an extension of your business. Our dedicated and experienced teams offer unique capabilities to help you meet your specific goals and challenges.

- Innovative, high-quality products with unique features
- A professional warranty and high service rate
- Purchasing conditions aimed at profitable growth
- A committed sales and marketing team for tailor-made support of expanding sales opportunities
- Continuous technical, commercial and hands-on training

Our world-class distribution centers and unrivaled global distributor network give Graco a unique industry advantage that allows us to rapidly deliver our products to end users worldwide.

Exceeding customer expectations is our priority. Our multilingual team of customer service specialists and technical engineers are available to you. Graco offers instructor-lead training sessions in the United States, EMEA and Asia Pacific. These courses teach theory and hands-on practical applications, covering basic operational to advanced technical knowledge. Each training session can be adapted to your specific needs.

Offering more than just products, we are focused on building relationships, identifying and developing business opportunities with you. Our sales team is available to collaborate, define strategies to assist in navigating through our product offering and provide advice on promotional activities.

Graco's marketing specialists investigate ways to expand the market and develop the right technologies for any application, in close cooperation with distributors and field users. We offer tailor-made promotional and communication support, from defining strategic requirements to developing marketing campaigns, organizing events and creating digital or printed material.

Did You Know?

Graco also manufactures and sells a complete line of automatic lubrication systems and accessories!

Keep your equipment running at peak performance. Graco automatic lubrication solutions give you the ultimate machine performance by lubricating key wear points – the right amount of lubricant, at the right time, in the right location. Graco has automatic lubrication solutions for the industrial, on-road mobile, off-road mobile, energy industries and more.

Visit www.graco.com/autolube

Graco Resources

Graco has developed tools and resources to help educate and better serve our distribution channel. Check them out today:

Graco Sales Book

Stay up-to-date with the newest information from Graco by downloading the Graco Sales Book App.

Graco Sales Book is an innovative mobile application, designed to give Distributors access to Graco product information, including brochures, manuals, videos, and training documents – all on your mobile device.

Download today by visiting
Salesbook.graco.com

Graco University

Graco University is an e-learning module that can be accessed online, anytime, and contains assets that help educate you on Graco products.

This innovative online learning program gives the tools to stay on the leading edge with a variety of resources such as virtual and instructor led courses, online books, live and on-demand video presentations, and much more.

Learn more today at
training.graco.com

Graco Gear

Graco Gear is your one-stop shop for branded merchandise and other tools that will help you build customer relationships.

Order shirts, hats, banners, and more whenever you need! You can even add your logo for a small fee. Most orders ship next day.

Start shopping today at
gracogear.com

FLUID MANAGEMENT SYSTEMS

Page

Fluid Management System Selection Guide 9
Benefits of Pulse® Pro Fluid Management 10
Steps to Build Your Pulse Pro System 11
Pulse Hub 12-13
Pulse Dispense Meter 14-15
Pulse Tank Level Monitor (TLM). 16
Pulse Pump Air Control (PAC). 17
Pulse Extender and Remote Extender 18
Pulse Roll Around Package and Accessories 19
Steps to Build Your Pulse FC System. 20
Pulse FC Software 21
Pulse FC Starter Kit 22
SD™ Preset Dispense Meters. 23-24
Pulse FC Packages and Accessories 25
Pulse Level Fluid Management 26-28
Traditional Box – Wired Fluid Control Components. . . 29

GRACO®

Fluid Management

GRACO

Choosing a Graco Fluid Management Solution

FEATURE	Traditional Box	Pulse FC	Pulse Pro
Control. Regulate the amount of fluid that's dispensed to reduce spillage and waste.			
Allow control of dispenses	✔	✔	✔
Restrict the quantity of fluid	✔	✔	✔
Ensure correct amount of fluid	✔	✔	✔
Meters. Put control into the hands of your technicians so they can be more productive, accurate and accountable.			
Works with petroleum, synthetic based oils, antifreeze	✔	✔	✔
Works with windshield wash solvent	✔		✔
Meter displays quantity dispensed		✔	✔
Fluid measured at dispense point (highly accurate)		✔	✔
Installation. Seamless integration simplifies dispenses without compromising workflows or productivity.			
Works with oil bar	✔	✔	✔
Wire-free installation		✔	✔
Wireless communication			✔
Pump air control (PAC)	✔		✔
Flexibility. Accommodate emerging demands to maintain or expand productivity and profitability.			
Works with mobile roll-around packages		✔	✔
Easy expansion with additional fluids		✔	✔
Easy upgrade to comprehensive fluid management		✔	N/A
User Interface. Access the information necessary to make more informed decisions quickly.			
Simple PC-based software		✔	
No software to install			✔
Accessible from any PC, phone or tablet			✔
Fluid Management. Improve accountability for your entire operations.			
Track dispenses by invoice or work order			✔
Track dispenses by technician			✔
Record fluid type and quantity dispensed			✔
Keeps technician in service bay			✔
Fluid Inventory. Simplify how you re-order and store inventory to minimize delays.			
Monitor tank levels (TLM)			✔
Dealer Management Solution (DMS) integration			✔
Reporting. Capture critical information and insights to simplify decision-making.			
Print on dispense			✔
Automated customizable reports			✔
Automated alerts to simplify inventory tasks			✔
Software updates		✔	✔
Permanent record of all dispenses or authorizations		✔	✔

Pulse® Pro Fluid Management simplifies how forward-thinking shops track and manage bulk fluids in real time – adding more transparency and accountability to drive productivity and profitability.

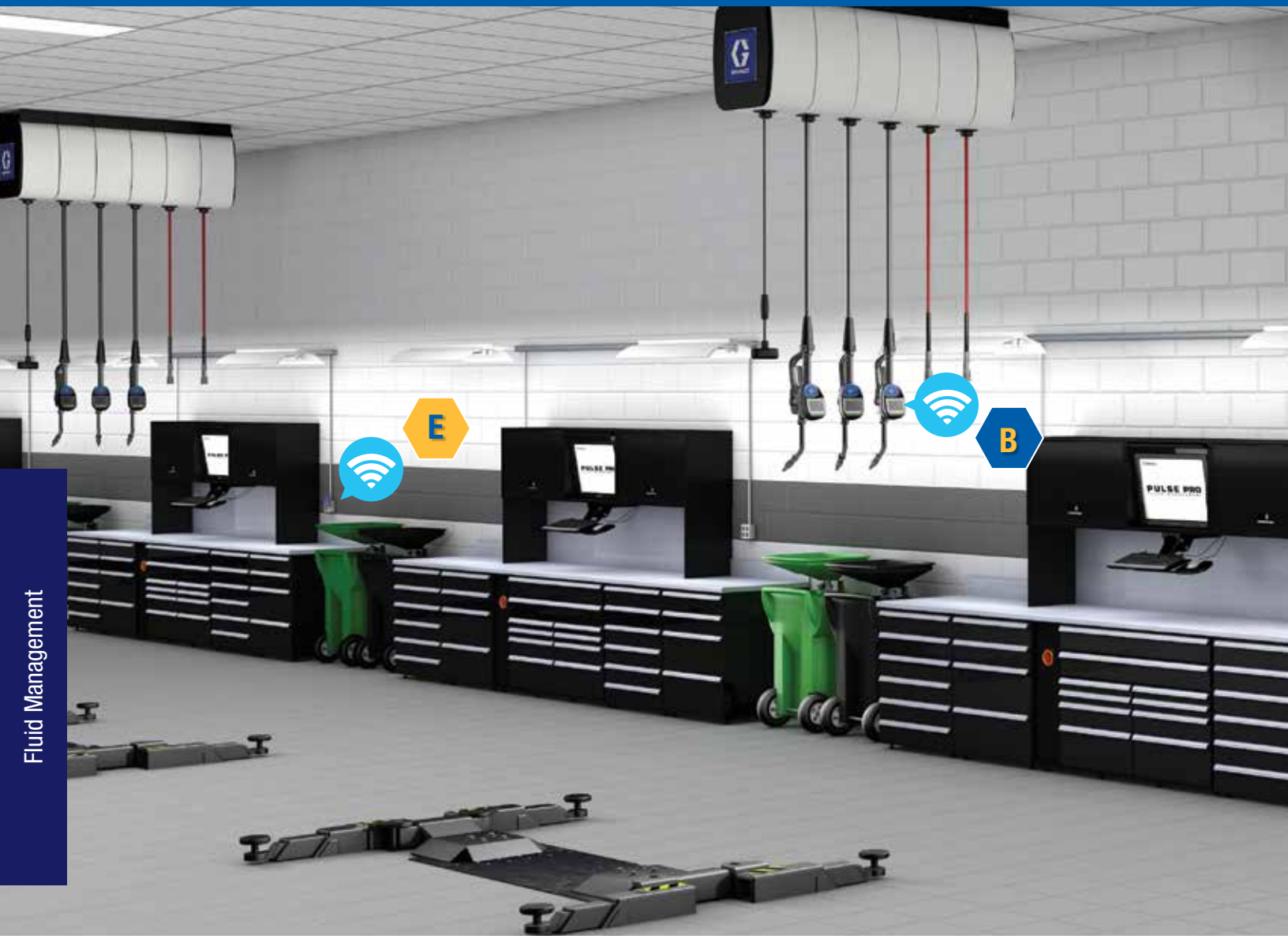

Benefits of Pulse Pro Fluid Management

Transparency. Monitor every drop, every time – automatically – and minimize shrinkage, rounding and discrepancies.

Accountability. Track issues to the source via advanced technology, including automated alerts and customizable reports.

Integration. Capture data, integrate it with popular DMSs and share it with other stakeholders quickly.

Portability. Pair with mobile dispense units and drums easily to reduce extra steps and hassles for technicians.

Scalability. Add Pulse into almost any environment quickly, and even retrofit applications or multiple buildings within the same facility.

Accurate billing. Automatically assign every ounce of fluid directly to a work order to simplify billing and maximize profit margins.

Simplicity. Avoid surprises, interruptions and delays. Fluids are tracked and recorded instantly and automatically.

Inventory management. Monitor fluid inventory and schedule refills to minimize delays and excessive costs.

Steps to Build Your Pulse Pro System:

A Hub with Software

1 REQUIRED

B Add Meters

MINIMUM 1 REQUIRED

Add Accessories

C Tank Level Monitor (TLM)

Tank Level Monitor can be used as a standalone product.

OPTIONAL

D Pump Air Controller (PAC)

OPTIONAL

E Pulse Extender and Pulse Remote Extender

OPTIONAL

F Roll Around Package

OPTIONAL

G Oil Bar Dispenser

OPTIONAL

A Pulse Hub

Simply connect the Pulse Hub to a power source and access your local network to get started. The self-contained device includes everything necessary for users to access monitoring and reporting tools instantly from any network-connected PC, tablet or smartphone.

2 Year Warranty!

Pulse Software

Pulse Pro Fluid Management software is pre-installed on the Pulse HUB and focused on simple intuitive design with powerful information at your fingertips. Get a quick consolidated view of all dispenses for the entire shop via specifically designed web page and easy-to-use software. Track tank levels at a glance. Generate customizable reports and automated e-mail alerts to share critical information with other key decision-makers. For further efficiency and automation, Pulse software can be integrated with your DMS through Pulse standard integrations or our generic third-party interface.

Wireless Communication

Communicates with Pulse devices.

No PC Software to Install

Pulse software delivered via web pages to any PC, tablet or phone.

Status Lights

Quickly verify Hub status.

Ethernet and Wi-Fi

LAN connection for flexible installations.

Built-In Backup

Includes SD card for database backup and restore.

Built-In Computer

Runs custom operating system to eliminate common PC operating system issues.

Universal Power Connections

Facilitates installation using 100–240 VAC electrical outlets.

Easily Updates

Automatic updates through internet connection.

Features and Benefits

- No PC software to install – Pulse Hub generates a local web page
- Responsive web design – Use any-size screen, from a PC to a phone
- Consolidated dispense queue – Find everything you need in one convenient table
- Advanced reporting – Create and schedule automated reports to track history and fluid usage
- Informative and preventive alerts – The software offers over two dozen alert activities
- Automatic software updates – Software notifies you when updates are ready to install

Technical Specifications

Weight	1.0 lb (454 gm)
Power Supply	
Input Power	100–240 VAC line voltage (0.05 A)
To Hub	5 VDC (0.5 amps)
Warranty	Two years electronics

A Ordering Information

Part Number	Description
24Z978	Hub for non-European installation with global power adapter

DMS Integration Options for Pulse Pro

An integration, put simply, is the communication between two separate business systems. Pulse uses integrations to provide enhanced control and monitoring for fluid dispenses.

Option 1 – *Partner Integrations*

AssetWORKS
- Requires FleetFocus: FA or M5 with FluidFocus Module
- Communication through Enterprise Asset Management System

CDK Global
- Requires CDK Drive DMS
- Communication through CDK's Third-Party Access Program

Dealertrack
- Requires Dealertrack DMS
- Communication through Dealertrack's Opentrack API

procede software
- Requires Excede v9.22+ with Excede Database
- Communication through Excede API v2.0

PBS
- Requires PBS DMS
- Communication through PBS Partner Hub

Reynolds & Reynolds RCI
- Requires ERA
- Communication through RCI Web Service

Option 2 – *Communication through Graco Third Party Interface*

PULSE FLUID MANAGEMENT DMS INTEGRATION
- Requires End-user developed integration for non-supported DMS

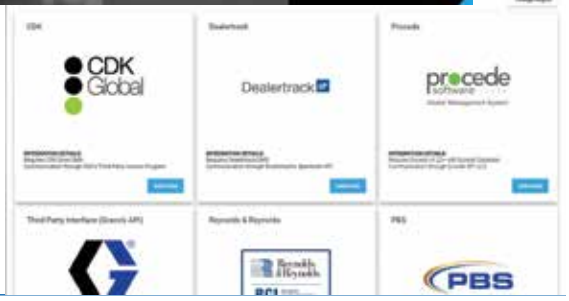

How It Works

The interface to business systems or DMS provides two important basic functions:

1 WORK ORDER VALIDATION

With DMS integration, dispenses occur only when a valid work order exists.

Work Order or Technician PIN
Authorization to Dispense
DMS

2 WORK ORDER POSTING

Pulse software communicates with the DMS, posting the dispense to the work order.

Post Dispense
Confirm Posting
DMS

Ordering Information

Interface Activation Codes

Part Number	Description
25R975	Pulse software with CDK Global Drive
25R976	Pulse software with Dealertrack
25R977	Pulse software with AssetWORKS
25R978	Pulse software with Reynolds & Reynolds
25R979	Pulse software with Procede Software – 2nd site
25R980	Pulse software with Procede Software
25R981	Pulse software with PBS

Oil | Gear Lube | Antifreeze | Washer Fluid | ATF

B Pulse Dispense Meter

The dispense meter is durable and easy to use, giving technicians everything they need at their fingertips. PINs and other data can be entered in moments via a larger, more intuitive display. NFC tags can be used for immediate PIN entry and faster access to work orders.

5 Year Warranty!

Large, Intuitive Display

High-contrast display for low- and bright-light conditions.

Faster PIN Entry

Built-in NFC reader and simple, efficient controls.

Wireless Communication

Communicates dispense information with Hub.

Ergonomic Design

Lower button placement.

Fluid Extension Kits

Choose from rigid, flexible or gear lube extensions with automatic flush-mount nozzle design.

Long Battery Life

Uses four off-the-shelf AA batteries – easy to replace.

Long-Life Valve Design

Cartridge design for long life and easier repair.

Protective Trigger Guard

Prevents accidental dispenses.

Fluid Management

Technical Specifications

Flow Range*	0.25 to 18 gpm (0.9 to 68 lpm)
Maximum Working Pressure	1,500 psi (103.4 bar)
Units of Measure (factory set to quarts)	Pints, quarts, gallons, liters
Weight	5.3 lbs (2.4 kg)
Inlet	1/2 in NPT or 3/4 in NPT
Outlet	3/4 in straight thread O-ring boss
Dimensions (without extension)	
Length	13 in (33 cm)
Width	3.75 in (9.5 cm)
Height	5.75 in (14.6 cm)
Maximum Recorded Dispense	999.99 units
Operating Temperature Range	4°F to 158°F (-16°C to 70°C)
Storage Temperature Range	-40°F to 158°F (-40°C to 70°C)
Battery**	4 AA alkaline or lithium batteries
RF Frequency Band	2,400 to 2,483.5 MHz
Maximum RF Transmit Power	8 dBm
Wetted Parts	Aluminum, stainless steel, PBT, nitrile rubber, zinc-plated carbon steel, nickel-plated carbon steel
Fluid Compatibility	Antifreeze, gear oil, crankcase oil, ATF, windshield wash (up to 50% alcohol-based solutions)
Meter Accuracy†	+/- 0.5 percent
Warranty	Five year structural, 3 years electronics, 1 year wear components

**Tested in 10W motor oil. Flow rates vary with fluid pressure, temperature and viscosity.*
***Battery required to meet life expectancy: Energizer® Alkaline E91.*
†At 2.5 gpm (9.5 lpm), at 70°F (21°C), with 10W oil and 1 gallon dispensed. May require calibration; out-of-box accuracy is +/- 1.25 percent.

B Ordering Information

8 gpm (30 lpm) Meters

Fluid	Extension	Nozzle	Size (in)	Part Number
Oil	Flexible	Automatic Quick-Close	1/2	25M319
	Rigid			25M317
Antifreeze	Flexible	Manual Antifreeze		25M320
	Rigid			25M318
Gear Lube	Gear Lube	Manual		25M326
Windshield Wash	Rigid	None		25M328

18 gpm (68 lpm) Meters

Fluid	Extension	Nozzle	Size (in)	Part Number
Oil / Antifreeze	Flexible	Manual High-Flow	1/2	25M324
	Rigid			25M323
	Flexible	Manual High-Flow	3/4	25M330
	Rigid			25M329

Accessories

Nozzle and Extension Kits

	Extension	Fluid	Nozzle Description	Part Number	Compatible Meters
	Rigid	Oil	Automatic, non-drip, quick-close	255852	Pulse 8 gpm
		Antifreeze	Non-drip, quick-close	26C267	Pulse 8 gpm
		Oil/Antifreeze	High-flow, non-drip, quick-close	255857	Pulse 18 gpm
	Rigid	Gear lube	Non-drip, quick-close	255854	Pulse 8 gpm
	Flexible	Oil	Automatic, non-drip, quick-close	255853	Pulse 8 gpm
		Antifreeze	Non-drip, quick-close	26C268	Pulse 8 gpm
		Oil/Antifreeze	High-flow, non-drip, quick-close	255858	Pulse 18 gpm
	Nozzle Only	Oil	Automatic, non-drip, quick-close	17R220	Pulse 8 gpm
		Antifreeze	Non-drip, quick-close	17T207	Pulse 8 gpm
		Oil/Antifreeze	High-flow, non-drip, quick-close	255461	Pulse 18 gpm
	Nozzle Only	Gear lube	Non-drip, quick-close	255470	Pulse 8 gpm
	Flexible	Oil/Antifreeze	Extension only, 2 ft length	131733	Pulse 8 gpm
	Rigid	Windshield wash	Extension, nozzle	273079	Pulse 8 gpm

NFC Tags

	Part Number	Description
	131462	NFC tags for user identification with meter. 25-pack, blue.

Hose Identification Wraps

Vinyl hose wrap for easy identification of meter fluid.

	Part Number	Description
	17S659	Red
	17S660	Blue
	17S661	Green
	17S662	Yellow
	17S663	White

Swivel Covers / Impact Protection

	Part Number	Description
	15T366	Black swivel cover (standard color with meter)
	15T367	Red swivel cover
	15T368	Blue swivel cover
	15T369	Green swivel cover
	15T370	Yellow swivel cover
	131226	Pulse / SD meter boot

Pulse Meter Filter Kits

Part Number	Description
25D906	Filter kit includes filters/strainers (15M308) and O-rings (155332)

Oil | Gear Lube | Antifreeze | Washer Fluid | ATF

C

Pulse Tank Level Monitor (TLM)

Measure your largest tanks accurately with minimal effort. The monitor's ultrasonic sensor records the tank level and can be configured to e-mail a daily report to key stakeholders detailing tank volumes, low- or high-level warnings and more.

2 Year Warranty!

Simple Wireless Setup

Automatic network identification.

Long Battery Life

Allows for remote installations. Uses four off-the-shelf AA batteries – easy to replace.

Built-In Display

Real-time level visible from built-in display.

Supports Multiple Tank Shapes

Ability to input strapping table for any tank shape.

Tough Exterior

Sealed enclosure to accommodate outdoor usage.

Compact Design

Easily fits into more spaces.

On-Demand Readings

Ability to take reading at any time.

C

Ordering Information

Part Number	Description
25M449	Tank Level Monitor (TLM)

Technical Specifications

Ultrasonic Tank Depth Measurement range (Not for use in pressurized tanks)	5 in to 30 ft (12.7 cm to 9.14 m)
Fluid Level Measurement Accuracy	+/- 1.8 in (4.57 cm)
Mounting	1.5 in and 2 in threaded NPT connector (Adapter for BSPP and BSPT thread options available)
Weight (with batteries installed)	1.25 lb (567 g)
RF Frequency Band	2,400 to 2,483.5 MHz
Operating Temperature Range (Display will not function below 32°F [0°C])	-22°F to 185°F (-30°C to 85°C)
Storage Temperature Range	-40°F to 185°F (-40°C to 85°C)
Batteries	Four AA alkaline
Enclosure	IPX5
RF Communication	2,400 to 2,483.5 MHz
Vertical Tanks	
Maximum Volume	999,999 gal (999,999 l)
Maximum Height	30 ft (9.14 m)
Cylindrical Tanks	
Maximum Volume	999,999 gal (999,999 l)
Maximum Height	30 ft (9.14 m)
Maximum Length	30 ft (9.14 m)
Maximum Width	30 ft (9.14 m)
Fluid Compatibility	Automatic transmission fluid, antifreeze, window wash, coolant, waste water
Warranty	Two years electronics

D

Pulse Pump Air Control (PAC)

Prevent unauthorized access to fluid inventory. Pump air supply is shut off automatically after the dispense, preventing spills and expensive cleanup if a broken line occurs. Pump operation is enabled only when a dispense has been activated from the meter.

2 Year Warranty!

Easy Installation

Built-in mounting bracket.

Simple Wireless Setup

Automatic network identification.

High-Volume Air Valve

Supports a variety of pumps.

Multiple Thread Options

NPT and BSPP air valve options.

Compact Design

Allows for mounting directly on pump or in tight spaces.

Rugged Exterior

Sealed enclosure to protect internal components.

Multiple Wiring Options

NEMA 5-15 plug or flying leads.

D

Ordering Information

Part Number	Description
24Z728	NPT with NEMA 5-15 plug

Technical Specifications

Minimum Operating Pressure	36 psi (0.25 MPa, 2.5 bar)
Maximum Operating Pressure	145 psi (1.0 MPa, 10 bar)
Maximum Air Flow	93 SCFM (2.6 m^3/min)
Power Supply	100–240 VAC line voltage, 24 VDC solenoid
Power Cord	
Model 24Z676, 24Z677	6 ft SJOOW, 3-wire, 18-gauge cable with flying leads
Model 24Z728	Power cord with integrated NEMA 5-15 plug
Current	25 to 60 mA
RF Frequency Band	2,400–2,483.5 MHz
Connection Ports Size (inlet, outlet, exhaust)	
Model 24Z676, 24Z728	3/8 in NPT
Model 24Z677	3/8 BSPP
Operating Temperature Range	14°F to 122°F (-10°C to 50°C)
Storage Temperature Range	-40°F to 185°F (-40°C to 85°C)
Weight	2.44 lbs (1.11 kg)
Dimensions	
Length	9.5 in (241.3 mm)
Width	2.25 in (57.2 mm)
Height	3.75 in (95.3 mm)
Warranty	Two years electronics

E

2 Year Warranty!

Pulse Extender

The Pulse wireless network can easily be expanded to accommodate large shops or a large number of devices. Simply plug the Extender into wall power to extend the network.

Expands Pulse Network

Supports 20 devices and extends the network range.

Simple Wireless Setup

Automatic network identification.

Integrated Electrical Plug

Simply plugs into wall.

Compact Design

Place conveniently in standard electrical outlet locations.

Technical Specifications

Operating Temperature	32°F to 140°F (0°C to 60°C)
Power Input	Universal AC input (100 - 240 VAC)
Length	2.31 in (5.87 cm)
Width	1.27 in (3.23 cm)
Height	3.28 in (8.33 cm)
Weight	0.5 lb (0.25 kg)
Warranty	Two years electronics

E Ordering Information

Part Number	Description
20A058	Pulse Pro Extender

Pulse Remote Extender

The Pulse wireless network can easily be expanded to accommodate devices in secondary on-site buildings. Connect the Remote Extender to wall power and local network via Ethernet or Wi-Fi to extend the network.

2 Year Warranty!

Expands Pulse Network

Supports 20 devices and extends the network range.

Simple Wireless Setup

Automatic network identification.

Multiple Network Connection Options

Utilizes local network Ethernet or Wi-Fi to communicate back to Hub.

Compact Design

Easy to place even in tight spaces.

Electrical Power

Includes plug-in power adapter.

Technical Specifications

Connections	Ethernet or Wi-Fi
Ethernet	10/100Base-T
Wi-Fi	802.11 b/g/n
Operating Temperature	32°F to 104°F (0°C to 40°C)
Length	3 in (7.62 cm)
Width	3 in (7.62 cm)
Height	1 in (2.54 cm)
Warranty	Two years electronics

E Ordering Information

Part Number	Description
17F878	Remote Extender with global power adapter

F

Roll Around Package

Pulse Pro Fluid Management wireless technology allows you to control your mobile drums and dispenses by providing security for expensive drums of synthetic and semi-synthetic fluids. Each package contains everything you need to manage your drums in existing Pulse installations. Drum not included.

Proven Durability

Graco LD® Series 3:1 pump is a durable, high performance pump solution.

Ease-of-Use

The battery-powered meter means only an air connection is needed to pump and manage fluid dispenses.

Ready to Roll

Packages include everything you need to set up the pump and meter system on your 55-gallon oil drum.

Mobile Productivity

Dispense fluids anywhere in your shop without compromising security or productivity.

F Ordering Information

Package Number	Extensions	Package Includes					
		Meter	Pump	Downtube	Drum Cart	Air Regulator	Hose
25D948	8 GPM, Rigid	25M317	24G576	16F878	24F915	24H420	24H865
25D952	8 GPM, Flexible	25M319					
25D953	8 GPM, Gear Lube	25M326					

G Ordering Information

Oil Bar

Part Number	Description
25D121	Oil Bar Console
25D130	Oil Bar Dispense Kit
25N415	Oil Bar Pulse Dispense Meter

Oil Bar
Components ordered separately. For complete unit, order console (25D121), dispense kit (25D130) (one per meter) and Pulse meters (25N415) as needed.

Accessories

	Part Number	Description
	249440	Console bracket

Pulse Pro Demo Kit

Pulse Pro demo case with everything needed to show customers how Pulse Pro will save them time, gain them more billable hours and maximize their fixed operation's profitability.

	Part Number	Description
	25D625	Includes Pulse Hub (24Z978), Pulse Dispense Meter, Pulse TLM (25M449), Pulse PAC (24Z728), Pulse Extender (20A058), Pulse Remote Extender (17F878), Pulse NFC Tag, case and protective foam

Pulse® FC is wire-free, so installation and configurations are easier and cheaper. We've replaced the big box console with fast, reliable and convenient fluid cards scanned at easy-to-handle meters, so users can employ the same type of familiar technologies they use elsewhere.

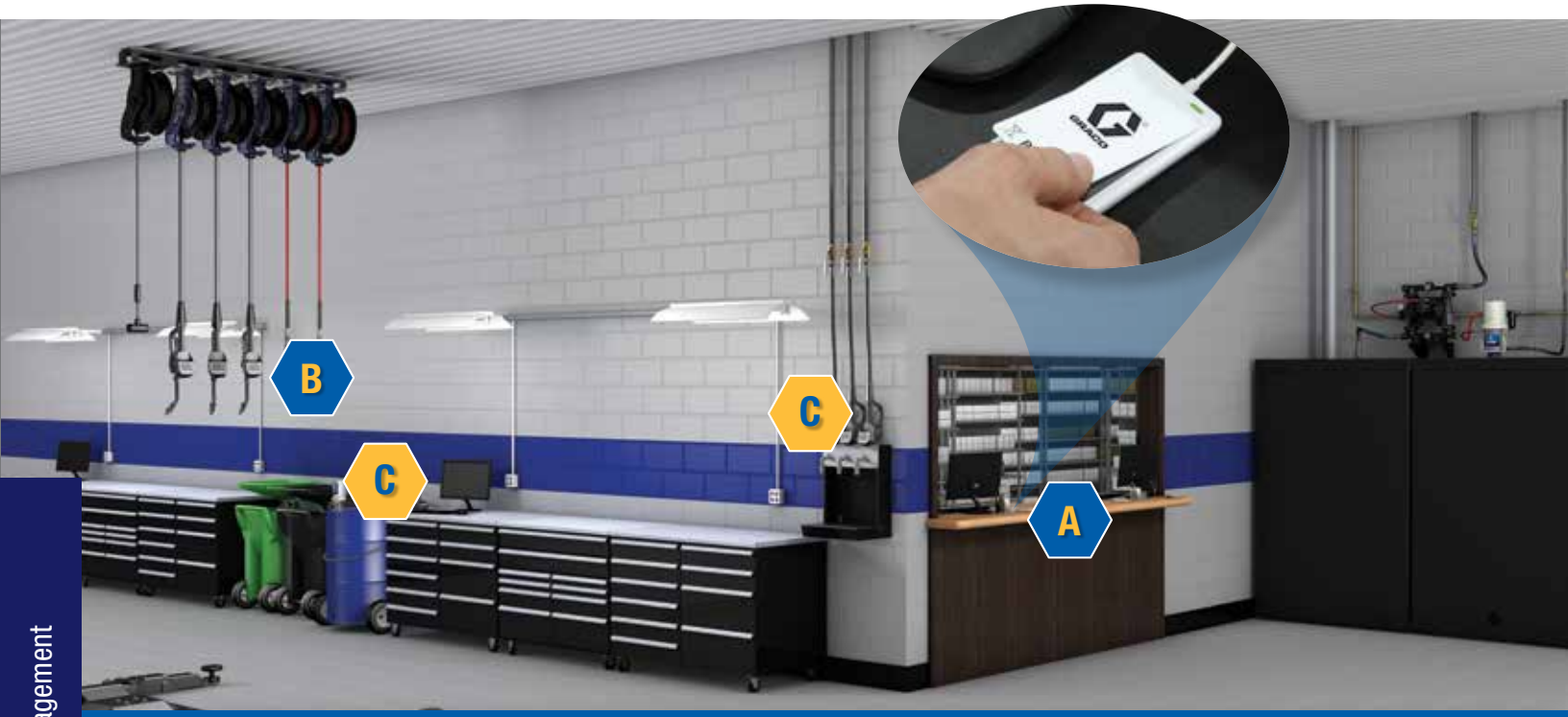

Steps to Build Your Pulse FC System:

A Starter Kit

1 REQUIRED

B Add SD™ Preset Meters

MINIMUM 1 REQUIRED

Add Accessories

C Oil Bar Dispenser

Roll Around Package

OPTIONAL

HOW IT WORKS

Pulse FC is a fluid control system that utilizes SD Preset meters. When put into Pulse FC mode, SD Preset meters will only dispense fluid when authorized with Fluid Cards. These included cards are programmed using the Pulse FC Software and Card Programmer. Once programmed, the cards are simply tapped to the meter which will be preset for the authorized amount of fluid and will not dispense any more than authorized.

PARTS ROOM/BACK OFFICE

1. Program fluid card with Pulse FC software and card programmer

5. Software indicates card has been returned and is ready to be reused

TECHNICIAN

2. Card passed to technician

4. Card is returned to parts room

WORKSHOP

3. Card tapped on any meter of correct fluid and meter is preset and restricted to the programmed quantity

GAIN INSIGHT INTO AND CONTROL OF YOUR BULK FLUIDS

Simplicity. Avoid surprises, interruptions and delays. Fluids are easily controlled so technicians can spend more time serving more customers.

Accountability. Be assured every vehicle or machine receives the appropriate amount of fluid for more accurate billing.

Scalability. Add Pulse FC into almost any environment quickly, even retrofit applications and avoid excessive installation costs and delays. You can also easily upgrade to Graco's Pulse Pro.

Mobility. Pair with mobile dispense units and drums quickly so your team can conveniently dispense without delays, hassles or extra steps.

Pulse FC Software

Pulse FC is a Windows PC-based software. Paired with the card programmer it allows setup and operation of the system. Cards can be utilized to authorize dispenses, totalize all fluids dispensed, as well as setup and calibrate SD™ Preset meters.

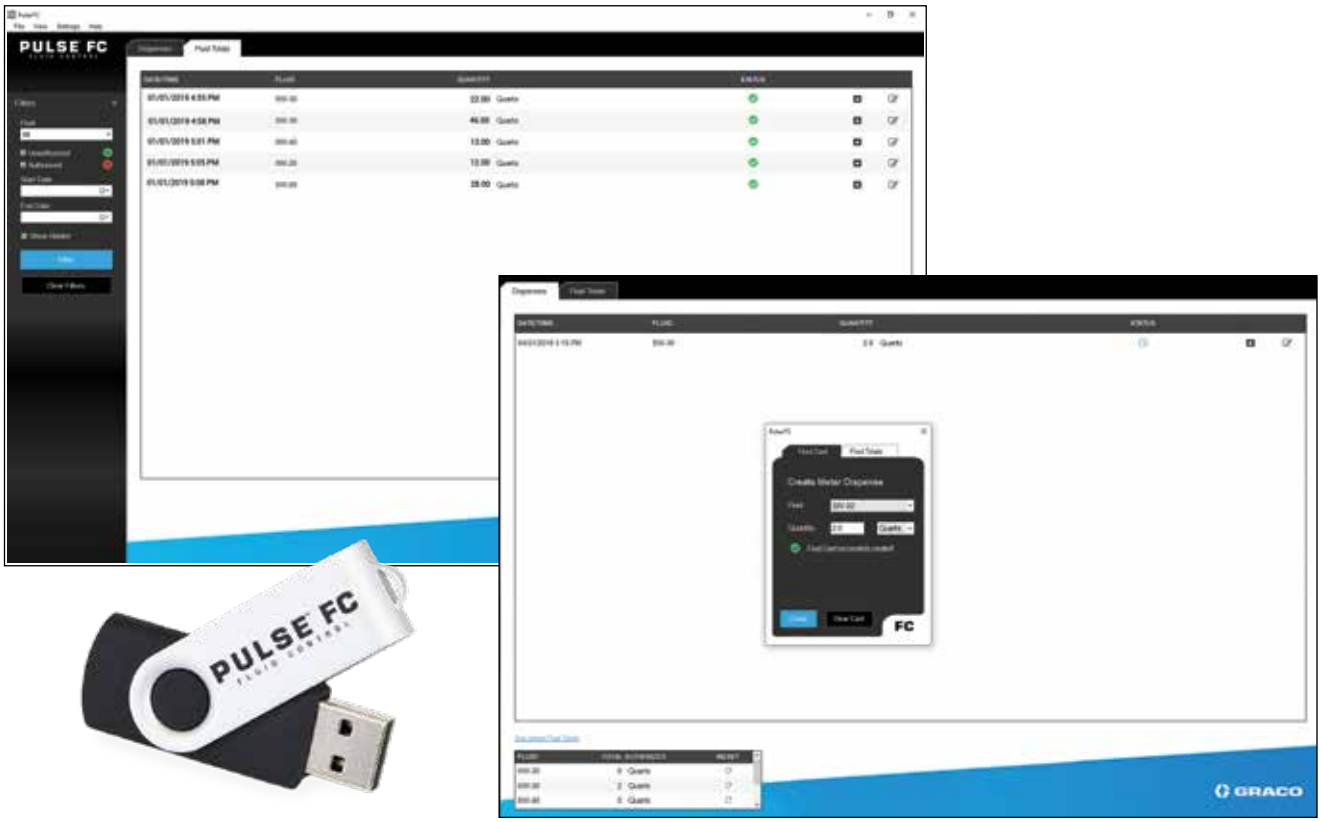

Oil | Gear Lube | Antifreeze | ATF

A Pulse FC Starter Kit

Enjoy an easy-to-use, easy-to-install, out-of-the-box fluid control system designed for fast wire-free setup and configuration. Pulse FC integrates into existing or new environments quickly and cost-effectively without interrupting daily operations.

Pulse FC Programmer

Easily program cards for dispense or fluid totals.

Pulse FC Fluid Cards

Reusable fluid cards can be scanned directly on the SD preset meter's built-in NFC reader.

Pulse FC Software

Simple PC-based software is used in conjunction with Pulse FC Programmer.

Pulse FC Software Quick Start

Easy-to-follow instructions for quick system setup.

A Ordering Information

Part Number	Description
26C401	Pulse FC Starter Kit – Includes Software, Card Programmer, Software Quick Start and 50-Pack of Fluid Cards

B

SD™ Preset Dispense Meters

Up to 18 gpm (68 lpm)

With Pulse FC, dispense only precise volumes to create efficiencies for your entire shop operation. Monitor how much fluid you're using. Choose the amount of fluid each technician can dispense in order to maintain accurate inventory.

Large LCD High-Contrast Display

High-contrast screen for reading in all lighting conditions with easy setup and navigation. See what fluid the meter is setup for and exactly how much you are dispensing.

Upgrade Option

Compatible with Pulse™ FC and upgradeable to Pulse™ Pro.

High Flow

Available in two models – 8 gpm (30 lpm) or 18 gpm (68 lpm).

Durable Cast Body

Designed for heavy duty and harsh applications.

Automatic Quick-Close Nozzle

Choose from rigid or flexible extensions with non-drip performance.

Long-Life Valve Design

Cartridge design for fewer and easier repairs.

Ergonomic Handle Design

Four-finger trigger and easy-to-use button pad reduce worker fatigue.

Typical Applications

- Automotive dealerships
- Heavy-duty dealerships
- Fast lube centers
- Fleet service facilities
- Service shops
- In-plant
- Mining

Typical Fluids Handled

- Petroleum- and synthetic-based oils (motor gear, and ATF)
- Antifreeze

Technical Specifications

Flow Range*	0.25 gpm to 18 gpm (0.9 lpm to 68 lpm)
Maximum Working Pressure	1,500 psi (103.4 bar)
Units of Measure	Pints, quarts, gallons, liters (factory set to quarts)
Metered Dispense Valve Accuracy**	+/- 0.5%
Inlet	1/2 in–14 NPT or 3/4 in–14 NPT
Outlet	3/4 in–16 straight thread O-ring Boss
Maximum Recorded Dispense	9999 units (factory set in quarts)
Operating Temperature Range	4°F to 158°F (-20°C to 70°C)
Storage Temperature Range	-40°F to 158°F (-40°C to 70°C)
Wetted Parts	Aluminum, stainless steel, PBT, nitrile rubber, zinc plated carbon steel, nickel plated carbon steel
Dimensions (without extension)	13 in L x 3.75 in W x 5.75 in H (33 cm x 9.5 cm x 14.6 cm)
Weight	5.3 lb (2.4 kg)
Warranty	Five years overall, three years electronics
Instruction Manual	3A6711 and 3A6673

*Tested in 10W motor oil. Flow rates vary with fluid pressure, temperature and viscosity.
**At 2.5 gpm (9.5 lpm), at 70°F (21°C), with 10-weight oil and 1 gallon dispensed. May require calibration.
***Battery required to meet life expectancy: Energizer® Alkaline E91.

Oil | Gear Lube | Antifreeze | ATF

B Ordering Information

SD™ Preset Electronic Meters

26C384

	Dispense Type	Flow Range gpm (lpm)	Fluid	Extension	Inlet in (NPT)	Part Number
SDP8	Preset (Pulse FC enabled)	0.25–8 (1–30)	Oil	Rigid	1/2	26C384
				Flexible	1/2	26C354
			Antifreeze	Rigid	1/2	26C385
				Flexible	1/2	26C355
			Gear lube	Rigid	1/2	26C358
SDP18	Preset (Pulse FC enabled)	0.25–18 (1–68)	Oil	Rigid	1/2	26C356
				Flexible	1/2	26C357
				Rigid	3/4	26C360
				Flexible	3/4	26C361

Nozzle and Extension Kits

	Extension	Fluid	Nozzle Description	Part Number	Compatible Meters
	Rigid	Oil	Automatic, non-drip, quick-close	255852	SDP8
		Antifreeze	Non-drip, manual open/close	26C267	SDP8
		Oil/Antifreeze	High-flow, non-drip, quick-close	255857	SDP18
	Rigid	Gear lube	Non-drip, quick-close	255854	SDP8
	Flexible	Oil	Automatic, non-drip, quick-close	255853	SDP8
		Antifreeze	Non-drip, manual open/close	26C268	SDP8
		Oil/Antifreeze	High-flow, non-drip, quick-close	255858	SDP18
	Nozzle Only	Oil	Automatic, non-drip, quick-close	17R220	SDP8
	Nozzle Only	Gear lube	Non-drip, quick-close	255470	SDP8
	Nozzle Only	Oil/Antifreeze	Non-drip, manual open/close	17T207	SDP8
	Flexible	Oil/Antifreeze	Extension only, 2 ft length	131733	SDP8

Fluid Management

C Ordering Information

Roll Around Package

Pulse FC wire-free technology allows you to control your mobile drums and dispenses by providing security for expensive drums of synthetic and semi-synthetic fluids. Each package contains everything you need to manage your drums in existing installations. Drum not included.

Package Number	Extensions	Package Includes					
		Meter	Pump	Downtube	Drum Cart	Air Regulator	Hose
26C366	8 GPM, Gear Lube	26C358	24G576	16F878	24F915	24H420	24H865
26C367	8 GPM, Flexible	26C354					
26C409	8 GPM, Rigid	26C384					

Oil Bar

Part Number	Description
25D121	Oil Bar Console
25D130	Oil Bar Dispense Kit
25N771	Oil Bar SD Preset Dispense Meter

Oil Bar
Components ordered separately. For complete unit, order console (25D121), dispense kit (25D130) (one per meter) and Pulse FC meters (25N771) as needed.

Accessories

Pulse FC Fluid Cards

Part Number	Description
130783	Pulse FC Fluid Cards – 50-Pack, White

Pulse FC Demo Kit

Part Number	Description
26C399	Includes Pulse FC Dispense Meter, Software, Card Programmer and 5-Pack of Fluid Cards

SD Meter Filter Kits

Part Number	Description
25D906	Filter kit includes filters/strainers (15M308) and O-rings (155332)

Swivel Covers / Impact Protection

	Part Number	Description
	15T366	Black swivel cover (standard color with meter)
	15T367	Red swivel cover
	15T368	Blue swivel cover
	15T369	Green swivel cover
	15T370	Yellow swivel cover
	131226	Pulse / SD meter boot

Hose Identification Wraps

Vinyl hose wrap for easy identification of meter fluid.

	Part Number	Description
	17S659	Red
	17S660	Blue
	17S661	Green
	17S662	Yellow
	17S663	White

Graco Pulse® Level offers highly intuitive tank-level-visibility options to help you optimize deliveries, margins and customer service. Choose from multiple tank-level-monitoring technologies, including a system that can run entirely on Wi-Fi. Track tank levels, capture and apply data, and assign distribution routes quickly, accurately and confidently from the industry's leading fluid management expert.

Choose Your Pulse Level System:

25T460

Ultrasonic Wi-Fi
There are other TLM solutions on the market – but none of them are designed for Wi-Fi configuration. When connected to a reliable network, marketers and their customers can avoid service fees or contracts entirely.

25T461

Ultrasonic Cellular
No need to worry about obsolete cellular network, we use a long term data solution. Versatile multi-thread adapter allows for installation on all different tank types.

25T462

Pressure Cellular
No need to worry about obsolete cellular network, we use a long term data solution. Our pressure unit is approved for hazardous locations and measures tanks up to 30 feet tall.

Typical Fluids Handled

- Petroleum- and synthetic-based oils (motor, gear and ATF)
- Fuel (diesel/gasoline/kerosene)
- Water/waste water
- Antifreeze
- Windshield washer fluid
- Waste oil
- DEF

Typical Applications

- Heavy-duty truck dealers
- Fleet maintenance
- Mining maintenance
- Public works garage
- Construction vehicle maintenance
- Heavy-duty mobile service trucks
- Mining
- Remote job sites

Part Number	25T460	25T461	25T462
No Monthly Fees	•		
No Maintenance Contract	•	•	•
Easy-to-Use Software for Monitoring Data	•	•	•
Easily Replaceable Batteries	•	•	•
NPT Thread for Easy Installation	•	•	•
Viewable Data with Other Models of Pulse Level	•	•	•
LTE Cellular Coverage		•	•
Works in Remote Locations		•	•
30 ft Tanks			•
Hazardous Environment Approved			•

Ultrasonic Wi-Fi

No Ongoing Fees

Wi-Fi connection.

Long Battery Life

7-year battery life with replaceable C batteries.

On-Demand Reading

Ability to take reading at any time.

Ultrasonic Sensor

Measure tanks 10 ft tall.

Ultrasonic Cellular

Cellular Communication

No need for local network connection.

Long Battery Life

5-year battery life with replaceable C batteries.

On-Demand Reading

Ability to take reading at any time.

Ultrasonic Sensor

Measure tanks 13 ft tall.

Pressure Cellular

Cellular Communication

No need for local network connection.

Long Battery Life

Up to 10-year battery life.

Submersible Pressure Sensor

Measure tanks up to 30 ft tall.

Hazardous-Location Rating

Approved for use with flammable fluids such as gasoline.

Oil | Gear Lube | ATF | Fuel | Water | Antifreeze | Washer Fluid | Oil/ Waste Oil | Diesel Exhaust Fluid (DEF)

Technical Specifications

	Ultrasonic Wi-Fi TLM	Ultrasonic Cellular TLM	Pressure Cellular TLM
Compatible Fluids	Oil, kerosene, diesel, lubricants, additives, DEF/AdBlue, coolants, water, waste oil, waste water	Oil, kerosene, diesel, lubricants, additives, DEF/AdBlue, coolants, water, waste oil, waste water	Oil, kerosene, diesel, lubricants, additives, DEF/AdBlue, coolants, water, waste oil, waste water, gasoline
Tank Depth Measurement Range	5.0 in to 9 ft-7 in	5.0 in to 13 ft	30 ft
Fluid Level Measurement Accuracy	+/- 1.0 in	+/- 1.0 in	+/- 1.0 in
Mounting	1.25 in,1.5 in and 2.0 in threaded NPT connector	1.25 in,1.5 in and 2.0 in threaded NPT connector	1 in threaded NPT connector with wall-mounted logger
Clearance Height Above Tank for TLM	7.5 in	7.5 in	N/A
Weight	0.5 lb	1.17 lb with batteries	0.75 lb
RF Frequency Band	2.412 GHz - 2.462 GHz	LTE CAT-M1	LTE CAT-M1
Maximum RF Transmit Power	18 dBm	23 dBm	23 dBm
Operating Temperature Range	0°F to 122°F	0°F to 122°F	-4°F to 131°F
Batteries	Li-SOC12 Size R14, 3.6V C-cell	4 x Alkaline C-cell	Graco Part Number 19D216
Battery Life	7.5 years* from activation	5 years*	10 years* from activation
Enclosure (Ingress Protection)	IP67	IP67	IP68
Tanks			
Maximum Volume	999,999 gallons	999,999 gallons	999,999 gallons
Maximum Height	9 ft-7 in	13 ft	30 ft
Altitude	<6,000 ft	<6,000 ft	<6,000 ft

*The battery life is based upon four (4) measurements per day and one (1) data drop per day from a location with adequate coverage, and a normal distribution over the operating temperature range centered at +25°C (77°F).

Pulse Level Software

Pulse Level software has a simple intuitive design and gives you powerful information at your fingertips. Get a quick consolidated view of key sites via a specifically designed web page. Track tank levels at a glance, generate customizable reports and automated email alerts, and share critical information with other key decision makers.

- Intuitive alerts ensure your customers never run out of products
- See the status of each customer site on an easy-to-view map
- Advanced reporting – create and schedule automated reports to track history and see usage trends
- Expand the capabilities of your existing software systems with tank data from Pulse Level's API
- Simple annual and monthly billing options, or avoid charges altogether with Wi-Fi
- Allow customer to find insights on their own tanks by sharing Pulse Level data
- Use customers' existing Pulse Pro hardware to avoid the cost of additional monitors

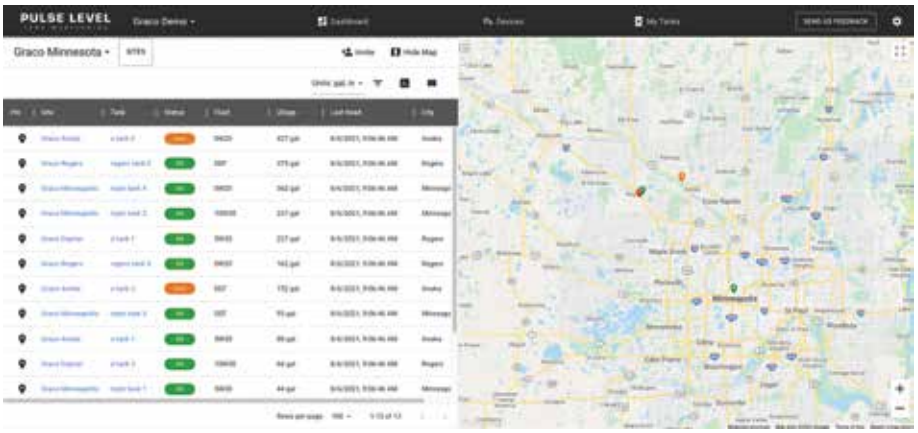

Oil | Gear Lube | Antifreeze | ATF

Ordering Information

In-Line Meters

Part Number	Description
236763	Electronic pulse output meter (quarts)
236764	Electronic pulse output meter (liters)
215474	Mechanical pulse output meter (quarts)
244342	Meter pulse converter, used when upgrading old-style modular fluid commander to electronic allows use of 215474/215475 with the EFC.

Air Solenoid Valves

Part Number	Description
215407	Air solenoid valve, 150 psi (10 bar) (1/2 npsm (f) conduit ports for wiring; 1/4 in NPT(F) air ports, adapted to 3/8 (f) IN, 3/8 (m) OUT) operates on 24V DC and 110 VAC. Automatically shuts-off air inlet to pump when pre-set dispensed amount is reached. Materials of construction: brass, SST, Buna.
105474	Air solenoid valve (bare) 150 psi (10 bar), same as 215407 but without wire connectors or adapters. 1/2 in npsm (f) conduit ports for wiring; 1/4 in NPT(F) air ports.150 psi (10.3 bar) max. working pressure.

Fluid Solenoid Valves

Part Number	Description
215487	Fluid solenoid valve, 1/2 in NPT(F) 3,000 psi (207 bar) operates on 24V DC. Automatically shuts-off fluid when pre-set dispensed amount is reached. Includes tube, valve, pin connector, wire plug connector and adapter.
514150	Fluid solenoid valve for antifreeze, 150 psi max. (10 bar), 1/2 in NPT(F), same as features as 215487.
110025	Bare fluid solenoid valve, 1/2 in NPT(F) 3,000 psi, same features as 215487 above, but without wiring connectors or adapters.

Ready-Light Kits

Part Number	Description
218588	Ready-light kit, signals operator when dispensing can begin. Includes “ready to dispense” indicator light (239019), strainer (240417), fluid solenoid valve (215487) and hardware.
238996	Ready-light with junction box (no solenoid or strainer)
239019	Ready-to-dispense indicator light only
113859	Lamp for indicator only

Installation Components

Part Number	Description
111620	Check valve
223179	Fluid filter kit (for bare electronic meter)
186472	Wall-mounting bracket
108458	Fluid shut-off valve
237893	Thermal relief kit for 900 psi (62 bar), relieves excess heat-induced pressure from dispense system. Male and female ends allow for simple installation.

Connecting Cables for Connecting Solenoids and Consoles, 90-volt, 2-wire, 18-gauge

Part Number	Description
215481	100 ft (30.5 m) pre-connected at both ends

Notes

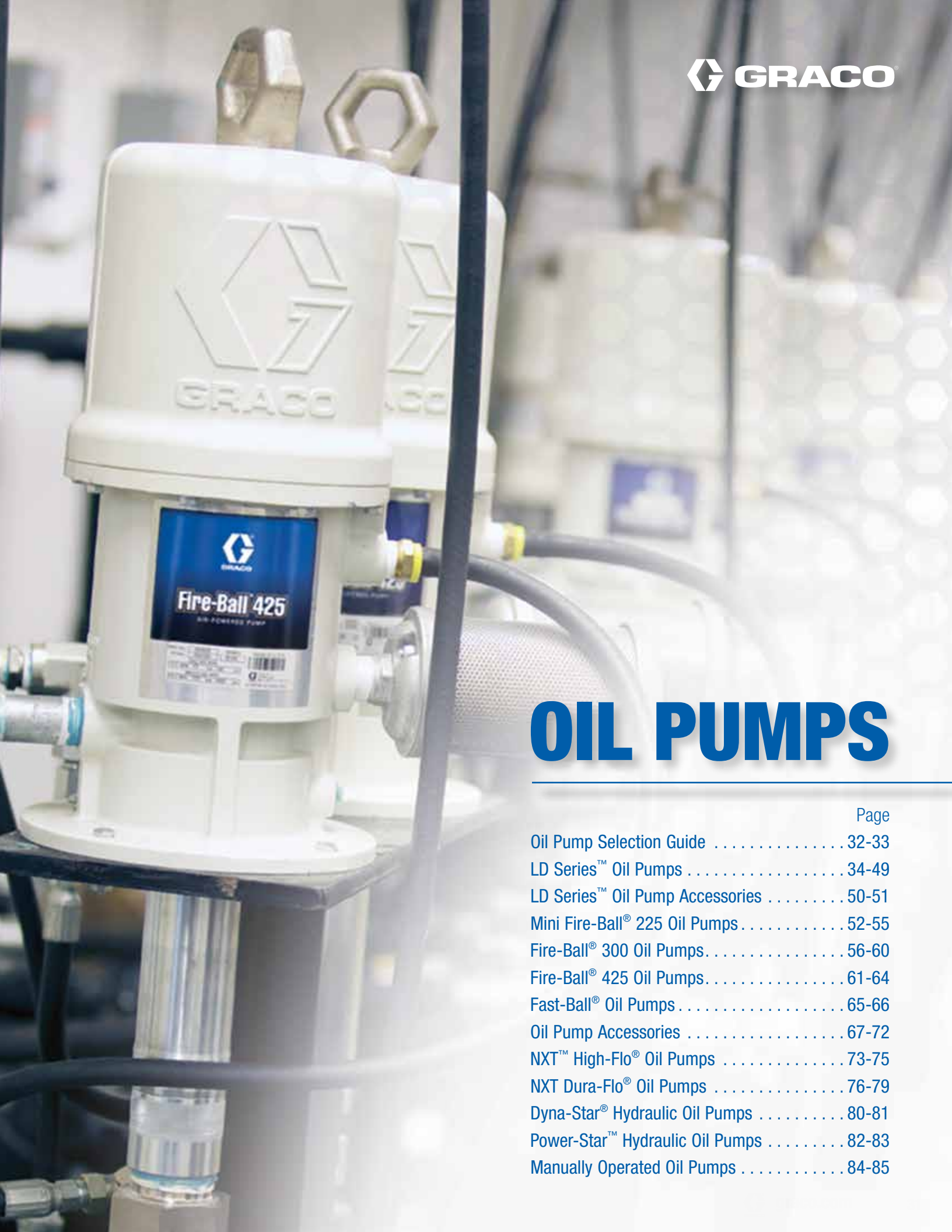

OIL PUMPS

	Page
Oil Pump Selection Guide	32-33
LD Series™ Oil Pumps	34-49
LD Series™ Oil Pump Accessories	50-51
Mini Fire-Ball® 225 Oil Pumps	52-55
Fire-Ball® 300 Oil Pumps	56-60
Fire-Ball® 425 Oil Pumps	61-64
Fast-Ball® Oil Pumps	65-66
Oil Pump Accessories	67-72
NXT™ High-Flo® Oil Pumps	73-75
NXT Dura-Flo® Oil Pumps	76-79
Dyna-Star® Hydraulic Oil Pumps	80-81
Power-Star™ Hydraulic Oil Pumps	82-83
Manually Operated Oil Pumps	84-85

Oil Pump Selection Guide

Pump Family and Fluid Pressure Ratio	Typical Applications	Annual Usage	Line Length	Simultaneous Dispense Points	Approx. Free Flow Rate @ 100 psi	Air Inlet	Fluid Inlet	Fluid Outlet	Air Operation Range	Reference Page
Fast-Ball, 1:1	• Automotive dealerships • Fast lube centers • Fleet service facilities • Heavy-duty dealerships • In-plant • Lube trucks • Lubricant transfer • Mining • Service shops	5,000 gal (19,00 l)	< 100 ft (30 m)	1 (no reels)	5 gpm (19 lpm)	1/4 NPT(F)	1-1/2 NPT(F)	3/4 NPT(F)	40-80 psi (2.7-12.5 bar)	66
LD, 3:1	• Automotive dealerships • Fast lube centers • Lube trucks • Lubricant transfer • Service shops	20,000 gal (75,000 l)	300 ft (91 m)	1 to 2	7.8 gpm (30 lpm)	1/4 NPT(F)	1 NPT(F)	1/2 NPT(F)	20-150 psi (1.37-10.3 bar)	34
LD, 5:1	• Automotive dealerships • Fast lube centers • Lube trucks • Lubricant transfer • Service shops	20,000 gal (75,000 l)	300 ft (91 m)	1 to 2	6.7 gpm (25 lpm)	1/4 NPT(F)	1 NPT(F)	1/2 NPT(F)	20-150 psi (1.37-10.3 bar)	34
Mini Fire-Ball 225, 3:1	• Automotive dealerships • Fast lube centers • Fleet service facilities • Heavy-duty dealerships • In-plant • Lube trucks • Lubricant transfer • Mining • Service shops	30,000 gal (113,500 l)	250 ft (76 m)	1 to 2	8.3 gpm (32 lpm)	3/8 NPT(F)	1-1/2 NPT(F)	1/2 NPT(F)	40-180 psi (2.8-12 bar)	52
Fire-Ball 300, 5:1	• Automotive dealerships • Fast lube centers • Fleet service facilities • Heavy-duty dealerships • In-plant • Lube trucks • Lubricant transfer • Mining • Service shops	35,000 gal (132,000 l)	500 ft (152 m)	1 to 3	12.1 gpm (46 lpm)	3/8 NPT(F)	1-1/2 NPT(F)	1/2 NPT(F)	40-180 psi (2.8-12 bar)	56
Fire-Ball 425, 3:1	• Automotive dealerships • Fast lube centers • Fleet service facilities • Heavy-duty dealerships • In-plant • Lube trucks • Lubricant transfer • Mining • Service shops	> 35,000 gal (132,000 l)	Up to 250 ft (76 m)	3 to 4	28.7 gpm (109 lpm)	1/2 NPT(F)	1-1/2 NPT(F)	3/4 NPT(F)	40-180 psi (2.8-12 bar)	61
Fire-Ball 425, 6:1	• Automotive dealerships • Fast lube centers • Fleet service facilities • Heavy-duty dealerships • In-plant • Lube trucks • Lubricant transfer • Mining • Service shops	> 35,000 gal (132,000 l	Up to 500 ft (152 m)	3 to 4	17.1 gpm (65 lpm)	1/2 NPT(F)	1-1/2 NPT(F)	3/4 NPT(F)	40-180 psi (2.8-12 bar)	61
Fire-Ball 425, 10:1	• Automotive dealerships • Fast lube centers • Fleet service facilities • Heavy-duty dealerships • In-plant • Lube trucks • Lubricant transfer • Mining • Service shops	> 35,000 gal (132,000 l	Up to 750 ft (228.6 m)	3 to 4	11.7 gpm (44 lpm)	1/2 NPT(F)	1-1/2 NPT(F)	3/4 NPT(F)	40-180 psi (2.8-12 bar)	61

Pump Family and Fluid Pressure Ratio	Typical Applications	Annual Usage	Line Length	Simultaneous Dispense Points	Air Inlet	Fluid Inlet	Fluid Outlet	Air Operation Range	Reference Page
NXT High Flo, 3.5:1	• Fleet service facilities • In-plant large runs • Large volume lubricant transfer • Mining remote fill	> 35,000 gal (132,000 l)	Up to 250 ft (76 m)	4 to 5	3/4 NPT(F)	1-1/2 NPT(F)	1 NPT(F)	20-100 psi (1.4-7 bar)	73
NXT High Flo, 4.5:1	• Fleet service facilities • In-plant large runs • Large volume lubricant transfer • Mining remote fill	> 35,000 gal (132,000 l)	Up to 450 ft (137 m)	4 to 5	3/4 NPT(F)	1-1/2 NPT(F)	1 NPT(F)	20-100 psi (1.4-7 bar)	73
NXT High Flo, 6:1	• Fleet service facilities • In-plant large runs • Large volume lubricant transfer • Mining remote fill	> 35,000 gal (132,000 l)	Up to 500 ft (152 m)	4 to 5	3/4 NPT(F)	2 NPT(F)	2 NPT(F)	20-75 psi (1.4-5.2 bar)	73
NXT Dura-Flo, 6:1	• Fleet service facilities • In-plant large runs • Large volume lubricant transfer • Mining remote fill	> 35,000 gal (132,000 l)	Up to 500 ft (152 m)	2 to 4	3/4 NPT(F)	2 NPT(F)	1-1/2 NPT(F)	20-100 psi (1.4-7 bar)	75
NXT Dura-Flo, 10:1	• Fleet service facilities • In-plant large runs • Large volume lubricant transfer • Mining remote fill	> 35,000 gal (132,000 l)	Up to 750 ft (228.6 m)	2 to 4	3/4 NPT(F)	2 NPT(F)	1-1/2 NPT(F)	20-100 psi (1.4-7 bar)	76
NXT Dura-Flo, 12:1	• Fleet service facilities • In-plant large runs • Large volume lubricant transfer • Mining remote fill	> 35,000 gal (132,000 l)	Up to 1000 ft (305 m)	2 to 4	3/4 NPT(F)	2 NPT(F)	1-1/2 NPT(M)	20-100 psi (1.4-7 bar)	76
NXT Dura-Flo, 23:1	• Fleet service facilities • In-plant large runs • Large volume lubricant transfer • Mining remote fill	> 35,000 gal (132,000 l)	Up to 1000 ft (305 m)	2 to 4	3/4 NPT(F)	2 NPT(F)	1-1/2 NPT(M)	20-75 psi (1.4-5.2 bar)	76

Pump Family and Fluid Pressure Ratio	Typical Applications	Maximum Output Flow Rate	Maximum Fluid Output Pressure	Hydraulic Inlet	Hydraulic Outlet	Fluid Inlet	Fluid Outlet	Maximum Hydraulic Inlet Pressure	Reference Page
Dyna-Star 1:1	• Fleet service facilities • Heavy-duty dealerships • In-plant • Lube trucks • Lubricant transfer • Mining • Service shops	3 gpm (11 lpm)	1500 psi (102 bar)	3/8 NPT(F)	3/4 NPT(F)	1-1/2 NPT(F)	1/2 NPT(F)	1500 psi (102 bar)	80
Dyna-Star 1/4:1	• Fleet service facilities • Heavy-duty dealerships • In-plant • Lube trucks • Lubricant transfer • Mining • Service shops	10 gpm (38 lpm)	375 psi (25.1 bar)	3/8 NPT(F)	3/4 NPT(F)	1-1/2 NPT(F)	1/2 NPT(F)	1500 psi (102 bar)	80
Power-Star 1:1	• Fleet service facilities • Heavy-duty dealerships • In-plant • Lube trucks • Lubricant transfer • Mining • Service shops	12 gpm (45 lpm)	1500 psi (102 bar)	3/4 NPT(F)	1-1/4 NPT(F)	1-1/2 NPT(F)	1/2 NPT(F)	1500 psi (102 bar)	82

Oil | Gear Lube | ATF

5 Year Warranty!

Durable and Hardworking

Stay ahead of the competition with LD Series pumps. These affordable and full-featured pumps are designed for lower-volume applications. LD pumps are fine-tuned for a compact, flexible and durable solution.

Three Inch Air Motor

Provides more power to create better flow.

Engineered for Durability

Patented cup and plate design eliminates the need for O-rings that wear out faster, for a more durable, longer-lasting solution.

Modular Air Valve

Air inlet and exhaust locations are easy to configure with just four bolts for simple, hassle-free installations.

Pilot Valves

Patented self-cleaning design increases reliability in dirty air environments and minimizes pressure drop with rapid changeovers for reduced stalling and smoother flow.

Built-In Thermal Relief and Inlet Strainer

Built-in thermal relief protects your equipment from thermal expansion, and an inlet strainer is built in to protect pump from contaminants.

Typical Applications

- Automotive dealerships
- Fast lube centers
- Service shops

Typical Fluids Handled

- Petroleum- and synthetic-based oils (motor, gear and ATF)

Pump Performance

LD Series 3:1 Pumps

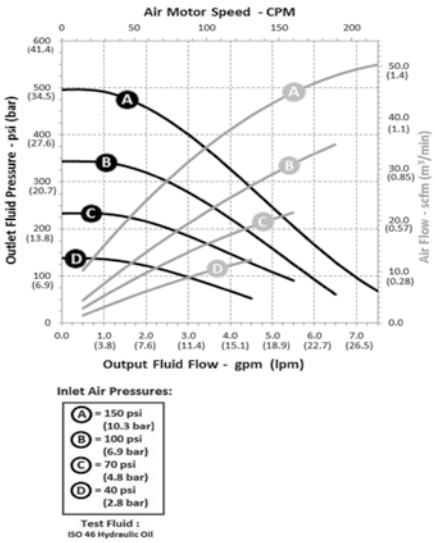

Inlet Air Pressures:

- A = 150 psi (10.3 bar)
- B = 100 psi (6.9 bar)
- C = 70 psi (4.8 bar)
- D = 40 psi (2.8 bar)

Test Fluid : ISO 46 Hydraulic Oil

LD Series 5:1 Pumps

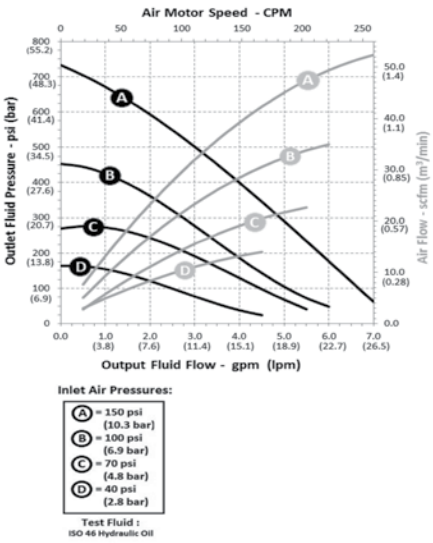

Inlet Air Pressures:

- A = 150 psi (10.3 bar)
- B = 100 psi (6.9 bar)
- C = 70 psi (4.8 bar)
- D = 40 psi (2.8 bar)

Test Fluid : ISO 46 Hydraulic Oil

Technical Specifications

	LD Series 3:1	LD Series 5:1
Fluid Pressure Ratio	3:1	5:1
Air Motor Effective Diameter	3 in (76.2 mm)	3 in (76.2 mm)
Maximum Fluid Working Pressure	450 psi (31 bar / 3.1 MPa)	750 psi (51.7 bar / 5.17 MPa)
Approximate Free Flow Rate @ 100 psi	7.8 gal/min (30 liters/min)	6.7 gal/min (25 liters/min)
Output per Cycle	131 cc	102 cc
Approximate Air Use and Flow @ 100 psi (80 cpm)	18 scfm @ 2.8 gpm (0.51 m^3/min @ 10.6 lpm)	18 scfm @ 2.1 gpm (0.51 m^3/min @ 8.0 lpm)
Air Inlet	1/4 in	1/4 in
Fluid Inlet	1 in	1 in
Fluid Outlet	1/2 in	1/2 in
Air Operation Range	20 psi to 150 psi (1.37 bar to 10.3 bar)	20 psi to 150 psi (1.37 bar to 10.3 bar)
Maximum Recommended Pump Speed	120 cpm	180 cpm
Cycles per Gallon (liter)	29 (7.7)	37 (9.8)
Wetted Parts	Zinc plated carbon, steel, aluminum, nitrile, polyurethane, nickel plated aluminum	Zinc plated carbon, steel, aluminum, nitrile, polyurethane, nickel plated aluminum
Sound Pressure Level	72.9 dB(A)	72.9 dB(A)
Sound Power Level	82 dB(A)	82 dB(A)
Approximate Weight	7 lb (3.2 kg)	7.7 lb (3.5 kg)
Instruction Manual	3A1334	3A1334

Ordering Information

LD Series 3:1 Pumps

Part Number	Description
24G576	3:1 Universal oil pump with bung adapter (24F918)
24G579	3:1 Oil pump with cut-to-length PVC downtube (16F878) and bung adapter (24F918)
24G582	3:1 Oil pump with 55 gal (200 liter) downtube (16F886) and bung adapter (24F918)
24G585	3:1 Oil pump with 275 gal (1,040 liter) steel downtube (16F885) and bung adapter (24F918)

LD Series 5:1 Pumps

Part Number	Description
24G588	5:1 Universal oil pump with bung adapter (24F918)
24G591	5:1 Oil pump with cut-to-length PVC downtube (16F878) and bung adapter (24F918)
24G594	5:1 Oil pump with 55 gal (200 liter) steel downtube (16F886) and bung adapter (24F918)
24G597	5:1 Oil pump with 275 gal (1,040 liter) steel downtube (16F885) and bung adapter (24F918)

Oil | Gear Lube | ATF

Ordering Information

Mobile Oil Packages – Cart

Self-relieving air regulator must be used for LD pump thermal relief function. Order regulator 24H420 or filter-regulator 133215 separately.

Package Number	24H751	24H750	24H753	24H752	24H775	24H774	24H777	24H776
Ratio	3:1	3:1	3:1	3:1	3:1	3:1	3:1	3:1
Pump Part Number	24G576	24G576	24G576	24G576	24G576	24G576	24G576	24G576
Suction Tube Size	200 L	200 L	200 L	200 L	200 L	200 L	200 L	200 L
Pump Downtube	16F886	16F886	16F886	16F886	16F886	16F886	16F886	16F886
Meter Type	Manual	Manual	Preset	Preset	Manual	Manual	Preset	Preset
Meter Part Number	25C903	25C904	256216	255277	25C903	25C904	256216	255277
Meter Extension	Rigid	Flexible	Rigid	Flexible	Rigid	Flexible	Rigid	Flexible
Hose Kit	24J495	24J495	24J495	24J495	24H865	24H865	24H865	24H865
Hose Reel Type	LDX	LDX	LDX	LDX	–	–	–	–
Hose Size	1/2 in x 50 ft	1/2 in x 50 ft	1/2 in x 50 ft	1/2 in x 50 ft	–	–	–	–
Hose Reel	HEM004	HEM004	HEM004	HEM004	–	–	–	–
55 gal Cart	24F915	24F915	24F915	24F915	24F915	24F915	24F915	24F915
Instruction Manual	3A1335	3A1335	3A1335	3A1335	3A1335	3A1335	3A1335	3A1335

Package 24H775 installed on a 55 gallon drum (not included in package).

Ordering Information

Mobile Oil Packages – Dolly

Self-relieving air regulator must be used for LD pump thermal relief function. Order regulator 24H420 or filter-regulator 133215 separately.

Package Number	25C551	25C553	25C550	25C552
Ratio	3:1	3:1	3:1	3:1
Pump Part Number	24G576	24G576	24G576	24G576
Container Size	16 gal (120 lb)	16 gal (120 lb)	55 gal (400 lb)	55 gal (400 lb)
Pump Downtube	16F878	16F878	16F886	16F886
Meter Type	Manual	Preset	Manual	Preset
Meter Part Number	25C903	256216	25C903	256216
Meter Extension	Rigid	Rigid	Rigid	Rigid
Hose Kit	24H865	24H865	24H865	24H865
Portable Base	131184	131184	129645	129645
Instruction Manual	3A1335	3A1335	3A1335	3A1335

Oil | Gear Lube | ATF

Ordering Information

Wall Mount Oil Packages

Self-relieving air regulator must be used for LD pump thermal relief function. Order regulator 24H420 or filter-regulator 133215 separately.

Package Number	24H689	24H695
Ratio	3:1	3:1
Pump Part Number	24G576	24G576
Suction Tube Size	55 gal drum	275 gal tote
Suction Hose Kit	24F935	24H666
Hose Kit	–	24H859
Wall Mount Bracket	24F910	24F910
Instruction Manual	3A1335	3A1335

Package 24H695 installed on a 275 gallon tote (not included in package).

Stationary Oil Packages

Self-relieving air regulator must be used for LD pump thermal relief function. Order regulator 24H420 or filter-regulator 133215 separately.

Package Number	24H800	24H799	24H802	24H801
Ratio	3:1	3:1	3:1	3:1
Pump Part Number	24G576	24G576	24G576	24G576
Suction Tube Size	Universal	Universal	Universal	Universal
Pump Downtube	16F878	16F878	16F878	16F878
Meter Type	Manual	Manual	Preset	Preset
Meter Part Number	25C903	25C904	256216	255277
Meter Extension	Rigid	Flexible	Rigid	Flexible
Hose Kit	24H859	24H859	24H859	24H859
Instruction Manual	3A1335	3A1335	3A1335	3A1335

Ordering Information

Stationary Oil Packages – Tote

Standard packages include LD Series hose reel. Self-relieving air regulator must be used for LD pump thermal relief function. Order regulator 24H420 or filter-regulator 133215 separately.

Package Number	24H702	24H704	24H726	24H728
Ratio	3:1	3:1	3:1	3:1
Pump Part Number	24G576	24G576	24G576	24G576
Suction Tube Size	275 gal (1,040 l)	275 gal (1,040 l)	275 gal (1,040 l)	275 gal (1,040 l)
Pump Downtube	16F885	16F885	24H669	24H669
Mounting Position	Top	Top	Drain	Drain
Reel Type	LDX	LDX	LDX	LDX
Hose Reel Part Number	HEM004	HEM004	HEM004	HEM004
Hose Size	1/2 in x 35 ft	1/2 in x 35 ft	1/2 in x 35 ft	1/2 in x 35 ft
Reel Bracket Kit	24K285	24K285	24K285	24K285
Meter Type	Manual	Preset	Manual	Preset
Meter Part Number	25C903	256216	25C903	256216
Meter Extension	Rigid	Rigid	Rigid	Rigid
Hose Kit	6 ft x 3/8 in air hose / 6 ft x 1/2 in fluid hose	6 ft x 3/8 in air hose / 6 ft x 1/2 in fluid hose	6 ft x 3/8 in air hose / 6 ft x 1/2 in fluid hose	6 ft x 3/8 in air hose / 6 ft x 1/2 in fluid hose
Hose Kit Part Number	24J495	24J495	24J495	24J495
Top Mount Tote Bracket	24F930	24F930	24F931	24F931
Tote Mount Pump Bracket	–	–	24F920	24F920
Meter Tray	24F914	24F914	24F914	24F914
Instruction Manual	3A1335	3A1335	3A1335	3A1335

Oil Gear Lube ATF

Ordering Information

Deluxe Stationary Oil Packages – Tote

Deluxe packages include SDX Series hose reel. Self-relieving air regulator must be used for LD pump thermal relief function. Order regulator 24H420 or filter-regulator 133215 separately.

Package Number	24K838	24K842
Ratio	3:1	3:1
Pump Part Number	24G576	24G576
Suction Tube Length	275 gal (1,040 l)	275 gal (1,040 l)
Pump Downtube	16F885	16F885
Reel Type	SDX	SDX
Hose Reel Part Number	SDM6HB	SDM6HB
Meter Type	Preset	Manual
Meter Part Number	256216	25C904
Meter Extension	Rigid	Flexible
Hoses and Fittings	24J495	24J495
Top Mount Tote Bracket	24F930	24F930
SDX Reel/IBC Tote Bracket	24K285	24K285
Meter Tray	24F914	24F914
Instruction Manual	3A1335	3A1335

Ordering Information

Tank Mount Oil Packages

Self-relieving air regulator must be used for LD pump thermal relief function. Order regulator 24H420 or filter-regulator 133215 separately.

Package Number	24J776	24J733	24J734	24K836
Ratio	3:1	3:1	3:1	3:1
Pump Part Number	24G576	24G576	24G576	24G576
Hose Reel Type	LDX	SDX	SDX	SDX
Hose Reel	HEM004	SDM6HB	SDM6HB	SDM6HB
Meter Type	Manual	Manual	Preset	Manual
Meter Part Number	25C903	25C903	256216	25C904
Meter Extension	Rigid	Rigid	Rigid	Flexible
Inlet Kit	25U371	218549	218549	218549
Instruction Manual	3A1335	3A1335	3A1335	3A1335

Oil | Gear Lube | ATF

Ordering Information

Deluxe Tank Mount Oil Packages

Deluxe packages include SDX hose reel, air and fluid hoses with fittings, and mini air regulator.

Package Number	24K777	24K797	24K799	24K834
Ratio	3:1	3:1	3:1	3:1
Pump Part Number	24G576	24G576	24G576	24G576
Hose Reel Type	SDX	SDX	SDX	SDX
Hose Size	1/2 in x 50 ft	1/2 in x 50 ft	1/2 in x 50 ft	1/2 in x 35 ft
Hose Reel	SDM6HB	SDM6HB	SDM6HB	SDM33B
Meter Type	Preset	Manual	Manual	Manual
Meter Part Number	256216	25C903	25C904	25C903
Meter Extension	Rigid	Rigid	Flexible	Rigid
Air and Fluid Hoses with Fittings	24J495	24J495	24J495	24J495
Mini Air Regulator with Gauge	24H420	24H420	24H420	24H420
Instruction Manual	3A1335	3A1335	3A1335	3A1335

Ordering Information

Mobile Oil Packages – Cart

Self-relieving air regulator must be used for LD pump thermal relief function. Order regulator 24H420 or filter-regulator 133215 separately.

Package Number	24H916	24H915	24H918	24H917	24H941	24H940	24H943	24H942
Ratio	5:1	5:1	5:1	5:1	5:1	5:1	5:1	5:1
Pump Part Number	24G588	24G588	24G588	24G588	24G588	24G588	24G588	24G588
Suction Tube Size	200 L	200 L	200 L	200 L	200 L	200 L	200 L	200 L
Pump Downtube	16F886	16F886	16F886	16F886	16F886	16F886	16F886	16F886
Meter Type	Manual	Manual	Preset	Preset	Manual	Manual	Preset	Preset
Meter Part Number	25C903	25C904	256216	255277	25C903	25C904	256216	255277
Meter Extension	Rigid	Flexible	Rigid	Flexible	Rigid	Flexible	Rigid	Flexible
Hose Kit	24J495	24J495	24J495	24J495	24H865	24H865	24H865	24H865
Hose Reel Type	LDX	LDX	LDX	LDX	–	–	–	–
Hose Size	1/2 in x 50 ft	1/2 in x 50 ft	1/2 in x 50 ft	1/2 in x 50 ft	–	–	–	–
Hose Reel	HEM004	HEM004	HEM004	HEM004	–	–	–	–
55 gal Cart	24F915	24F915	24F915	24F915	24F915	24F915	24F915	24F915
Instruction Manual	3A1335	3A1335	3A1335	3A1335	3A1335	3A1335	3A1335	3A1335

Package 24H941 installed on a 55 gallon drum (not included in package).

Oil | Gear Lube | ATF

Ordering Information

Mobile Oil Packages – Dolly

Self-relieving air regulator must be used for LD pump thermal relief function. Order regulator 24H420 or filter-regulator 133215 separately.

Package Number	25C555	25C557	25C554	25C556
Ratio	5:1	5:1	5:1	5:1
Pump Part Number	24G588	24G588	24G588	24G588
Container Size	16 gal (120 lb)	16 gal (120 lb)	55 gal (400 lb)	55 gal (400 lb)
Pump Downtube	16F878	16F878	16F886	16F886
Meter Type	Manual	Preset	Manual	Preset
Meter Part Number	25C903	256216	25C903	256216
Meter Extension	Rigid	Rigid	Rigid	Rigid
Hose Kit	24H865	24H865	24H865	24H865
Portable Base	131184	131184	129645	129645
Instruction Manual	3A1335	3A1335	3A1335	3A1335

Ordering Information

Wall Mount Oil Packages

Self-relieving air regulator must be used for LD pump thermal relief function. Order regulator 24H420 or filter-regulator 133215 separately.

Package Number	24H836	24H842
Ratio	5:1	5:1
Pump Part Number	24G588	24G588
Suction Tube Size	55 gal drum	275 gal tote
Suction Hose Kit	24F935	24H666
Hose Kit	–	24H859
Wall Mount Bracket	24F910	24F910
Instruction Manual	3A1335	3A1335

Package 24H842 installed on a 275 gallon tote (not included in package).

Stationary Oil Packages

Self-relieving air regulator must be used for LD pump thermal relief function. Order regulator 24H420 or filter-regulator 133215 separately.

Package Number	24H965	24H964	24H967	24H966
Ratio	5:1	5:1	5:1	5:1
Pump Part Number	24G588	24G588	24G588	24G588
Suction Tube Size	Universal	Universal	Universal	Universal
Pump Downtube	16F878	16F878	16F878	16F878
Meter Type	Manual	Manual	Preset	Preset
Meter Part Number	25C903	25C904	256216	255277
Meter Extension	Rigid	Flexible	Rigid	Flexible
Hose Kit	24H859	24H859	24H859	24H859
Instruction Manual	3A1335	3A1335	3A1335	3A1335

Oil | Gear Lube | ATF

Ordering Information

Stationary Oil Packages – Tote

Standard packages include LD Series hose reel. Self-relieving air regulator must be used for LD pump thermal relief function. Order regulator 24H420 or filter-regulator 133215 separately.

Package Number	24H868	24H870	24H892	24H894
Ratio	5:1	5:1	5:1	5:1
Pump Part Number	24G588	24G588	24G588	24G588
Suction Tube Size	275 gal (1,040 l)	275 gal (1,040 l)	275 gal (1,040 l)	275 gal (1,040 l)
Pump Downtube	16F885	16F885	24H669	24H669
Mounting Position	Top	Top	Drain	Drain
Reel Type	LDX	LDX	LDX	LDX
Hose Reel Part Number	HEM004	HEM004	HEM004	HEM004
Hose Size	1/2 in x 35 ft	1/2 in x 35 ft	1/2 in x 35 ft	1/2 in x 35 ft
Reel Bracket Kit	24K285	24K285	24K285	24K285
Meter Type	Manual	Preset	Manual	Preset
Meter Part Number	25C903	256216	25C903	256216
Meter Extension	Rigid	Rigid	Rigid	Rigid
Hose Kit	6 ft x 3/8 in air hose / 6 ft x 1/2 in fluid hose	6 ft x 3/8 in air hose / 6 ft x 1/2 in fluid hose	6 ft x 3/8 in air hose / 6 ft x 1/2 in fluid hose	6 ft x 3/8 in air hose / 6 ft x 1/2 in fluid hose
Hose Kit Part Number	24J495	24J495	24J495	24J495
Top Mount Tote Bracket	24F930	24F930	24F931	24F931
Tote Mount Pump Bracket	–	–	24F920	24F920
Meter Tray	24F914	24F914	24F914	24F914
Instruction Manual	3A1335	3A1335	3A1335	3A1335

Ordering Information

Deluxe Stationary Oil Packages – Tote

Deluxe packages include SDX Series hose reel. Self-relieving air regulator must be used for LD pump thermal relief function. Order regulator 24H420 or filter-regulator 133215 separately.

Package Number	24K839	24K843
Ratio	5:1	5:1
Pump Part Number	24G588	24G588
Suction Tube Length	275 gal (1,040 l)	275 gal (1,040 l)
Pump Downtube	16F885	16F885
Reel Type	SDX	SDX
Hose Reel Part Number	SDM6HB	SDM6HB
Hose Reel Bracket	24K285	24K285
Meter Type	Preset	Manual
Meter Part Number	256216	25C904
Meter Extension	Rigid	Flexible
Hoses and Fittings	24J495	24J495
Top Mount Tote Bracket	24F930	24F930
Meter Tray	24F914	24F914
Instruction Manual	3A1335	3A1335

Oil | Gear Lube | ATF

Ordering Information

Oil Packages – Tank Mount

Self-relieving air regulator must be used for LD pump thermal relief function. Order regulator 24H420 or filter-regulator 133215 separately.

Package Number	24J777	24J735	24J736	24K837
Ratio	5:1	5:1	5:1	5:1
Pump Part Number	24G588	24G588	24G588	24G588
Reel Type	LDX	SDX	SDX	SDX
Hose Reel Part Number	HEM004	SDM6HB	SDM6HB	SDM6HB
Meter Type	Manual	Manual	Preset	Manual
Meter Part Number	25C903	25C903	256216	25C904
Meter Extension	Rigid	Rigid	Rigid	Flexible
Inlet Kit	25U371	218549	218549	218549
Instruction Manual	3A1335	3A1335	3A1335	3A1335

Ordering Information

Deluxe Oil Packages – Tank Mount

Deluxe packages include SDX hose reel, air and fluid hoses with fittings, and mini air regulator.

Package Number	24K796	24K798	24K800	24K835
Ratio	5:1	5:1	5:1	5:1
Pump Part Number	24G588	24G588	24G588	24G588
Reel Type	SDX	SDX	SDX	SDX
Hose Size	1/2 in x 50 ft (12.7 mm x 15 m)	1/2 in x 50 ft (12.7 mm x 15 m)	1/2 in x 50 ft (12.7 mm x 15 m)	1/2 in x 35 ft (12.7 mm x 10.6 m)
Hose Reel Part Number	SDM6HB	SDM6HB	SDM6HB	SDM33B
Meter Type	Preset	Manual	Manual	Manual
Meter Part Number	256216	25C903	25C904	25C903
Meter Extension	Rigid	Rigid	Flexible	Rigid
Air and Fluid Hoses with Fittings	24J495	24J495	24J495	24J495
Mini Air Regulator with Gauge	24H420	24H420	24H420	24H420
Instruction Manual	3A1335	3A1335	3A1335	3A1335

LD Series Oil Pump Accessories

Oil | Gear Lube | ATF

Ordering Information

Air Regulators

	Part Number	Description
	24H420	Mini air pressure regulator with gauge, 1/4 in NPT x 3/8 in NPT, self-relieving
	133215	Mini air filter-regulator with gauge, 1/4 in NPT, self-relieving, semi-auto drain

Carts

	Part Number	Description
	24F915	Drum cart with pneumatic wheels for 55 gallon drums, includes chain for securing drum to cart

LD Drum Dollies

	Part Number	Description
	131183	Drum dolly for 35 lb (16 kg) drum
	131184	Drum dolly for 120 lb (54 kg) drum
	129645	Drum dolly for 400 lb (182 kg) drum

Downtubes

	Part Number	Description
	16F878	Universal cut to length PVC downtube
	16F886	Drum length steel downtube
	16F885	Tote length steel downtube

Drum Covers

	Part Number	Description
	24F904	Cover for 35 lb (16 kg) pails
	24F905	Cover for open-head 120 lb drums
	24F906	Cover for open-head 400 lb drums

Hose and Fitting Kits

	Part Number	Description	Kit Includes			
			Fluid Hose	Air Hose	Swivel	Union Fitting
	24H865	15 ft LD pump fluid hose kit	1/2 in x 15 ft	3/8 in x 6 ft	157705	156684
	24H859	6 ft LD pump fluid hose kit	1/2 in x 6 ft	3/8 in x 6 ft	157705	156684

Ordering Information

Suction Kits

	Part Number	Description
	24F935	LD oil pump suction hose kit for 55 gal (200 L) drum. Includes 55 gal (200 L) drum length metal downtube, bung adapter, foot valve and 6 ft of 1 in suction hose
	24H666	LD oil pump suction hose kit for 275 gal (1,040 L) drum. Includes 275 gal (1,040 L) tote length metal downtube, bung adapter, foot valve and 6 ft of 1 in suction hose
	24H669	LD oil pump suction hose kit and adapter for mounting pump to the side of IBC tote and dispensing from drain. Includes 1 in x 3 ft suction hose, 1 in elbow fitting and union fitting (160022)

Mounting Hardware

	Part Number	Description
	24F910	LD Series pump wall mounting bracket
	24F918	Bung adapter

Tote Mount Accessories

	Part Number	Description
	24F914	Meter drip tray for mounting to the side of IBC tote
	24F932	LD Series reel bracket for mounting reel to IBC top mount tote bracket (24F930 and 24F920)
	24F931	Tote mounting bracket to mount reel on top of IBC tote (pump mounting bracket is not included)
	24F930	Top of tote mounting bracket. For mounting LD Series pump in top of IBC tote.
	24F920	Bracket for mounting LD Series pump on the side of IBC tote
	24K285	Bracket for mounting SDX Series hose reel to IBC tote mounting bracket 24F930 (24F930 bracket sold separately)

Oil | Gear Lube | ATF

7 Year Warranty!

Perfect for Medium Pressure, Low-Volume Applications

You can't afford downtime, especially when your shop is small. The Mini Fire-Ball 225 is designed with fewer moving parts, which means less wear and tear and reduced downtime, allowing you to run a more profitable business.

Durable Casting

Thick cast aluminum air motor housing offers unmatched durability.

Fewer Repairs

Fewer moving parts in the air motor assembly means less downtime and low repair cost.

Extended Seal Life

In-line pump design aligns the air motor piston and fluid piston rods to maximize seal life.

Superior Sealing

Non-metallic poppet valves offer positive sealing performance, even with contaminated "dirty" air environments for long life without repair.

Corrosion-Resistant

Corrosion-resistant design utilizes liquid salt nitriding, nickel plating, stainless steel, aluminum and chrome on key components for longer life.

Typical Applications

- Automotive dealerships
- Fast lube centers
- Service shops
- Heavy-duty dealerships
- Fleet services facilities
- In-plant
- Lube trucks
- Mining

Typical Fluids Handled

- Petroleum- and synthetic-based oils (motor, gear and ATF)

Pump Performance

Mini Fire-Ball 225 3:1 Pumps

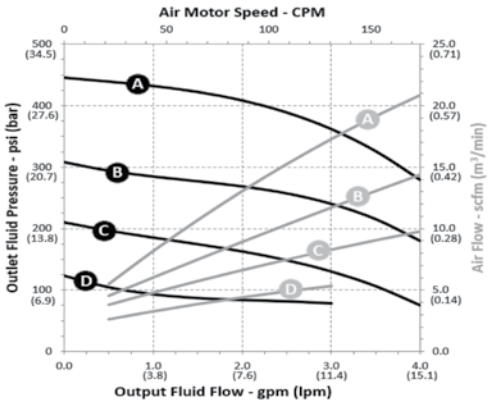

Inlet Air Pressures:
- A = 150 psi (10.3 bar)
- B = 100 psi (6.9 bar)
- C = 70 psi (4.8 bar)
- D = 40 psi (2.8 bar)

Test Fluid : No. 10 Weight Oil

Technical Specifications

Fluid Pressure Ratio	3:1
Air Motor Effective Diameter	2.25 in (57.2 mm)
Maximum Fluid Working Pressure	540 psi (37 bar / 3.7 MPa)
Approximate Free Flow Rate @ 100 psi	8.3 gal/min (32 liters/min)
Output per Cycle	87 cc
Approximate Air Use and Flow @ 100 psi (80 cpm)	9 scfm @ 1.9 gpm (0.25 m^3/min @ 7.2 lpm)
Air Inlet	3/8 in NPT(F)
Fluid Inlet	1-1/2 in NPT(F)
Fluid Outlet	1/2 in NPT(F)
Air Operation Range	40 psi to 180 psi (2.8 bar to 12 bar)
Maximum Recommended Pump Speed	100 cpm
Cycles per Gallon (Liter)	43.5 (11.5)
Wetted Parts	Steel, Buna-N, polyurethane, aluminum, Rulon®
Sound Pressure Level	77.8 dB(A)
Sound Power Level	85.6 dB(A)
Approximate Weight	16 lb (7.3 kg)
Instruction Manual	309868

Ordering Information

Mini Fire-Ball 225 3:1 Pumps

Part Number	Description
246775	3:1 Universal oil pump
248097	3:1 Universal oil pump with suction tube (15C502) and bung adapter (222308)

Mini Fire-Ball 225 3:1 Oil Pump Packages

Oil | Gear Lube | ATF

Ordering Information

Oil Packages

Package Number	246903*	246904*	246906*	246907**	248230**
Ratio	3:1	3:1	3:1	3:1	3:1
Package Type	Portable	Cover-mounted	Cover-mounted	Bung-mounted	Bung-mounted
Maximum Container Size	16 gal (60 l)	16 gal (60 l)	55 gal (200 l)	55 gal (200 l)	275 gal (1,040 l)
Pump	248097	248097	248097	248097	246775
Meter Type	Manual	–	–	–	–
Meter Part Number	25M413	–	–	–	–
Meter Extension	Rigid	–	–	–	–
Dispense/ Hose Fitting Kit	237075	222063	222063	222063	222062
Fluid Hose Size	1/2 in x 6 ft (12.7 mm x 1.8 m)	1/2 in x 6 ft (12.7 mm x 1.8 m)	1/2 in x 6 ft (12.7 mm x 1.8 m)	1/2 in x 6 ft (12.7 mm x 1.8 m)	1/2 in x 1.5 ft (12.7 mm x 0.46 m)
Air Hose Size	–	3/8 in x 6 ft (9.5 mm x 1.8 m)	3/8 in x 6 ft (9.5 mm x 1.8 m)	3/8 in x 6 ft (9.5 mm x 1.8 m)	3/8 in x 1.5 ft (9.5 mm x 0.46 m)
Air Regulator	224512	224512	224512	–	–
Pump Shim	17C270	17C270	17C270	–	–
Cover	24R350	24R350	200326	–	–
Caster Base	203622	–	–	–	–
Instruction Manual	307884	307883	307883	307883	309868

*Order low-level shut-off (203688) (1-1/2 in NPT) separately for metered dispense systems.
**Order low-level shut-off (203688) (1-1/2 in NPT) separately for metered dispense systems. Use 3/8 in (9.5 mm) air regulator (109075) as required; must be ordered separately.

Ordering Information

Bulk Oil Dispensing Packages

Package Number	248623*	248622*	24F205	24F206
Ratio	3:1	3:1	3:1	3:1
Pump	248097	248097	246775	246775
Bung Adapter	–	–	222308	222308
Reel Size	1/2 in x 50 ft (12.7 mm x 15.2 m)	1/2 in x 35 ft (12.7 mm x 11 m)	1/2 in x 50 ft (12.7 mm x 15.2 m)	1/2 in x 50 ft (12.7 mm x 15.2 m)
Reel Type	SDX	SDX	SDX	SDX
Hose Reel	SDM6HB	SDM33B	SDM6HB	SDM6HB
Meter Type	EM8	EM8	Mechanical	EM8
Manual/Preset	Manual	Manual	Manual	Manual
Meter	25C903	25C903	24V034	25C903
Installation Kit	–	–	222062	222062
Air Regulator	–	–	109075	109075
Instruction Manual	309868, 312668, 313431	309868, 312668, 313431	309868, 313431	309868, 313431

*Order (218549) (1/2 in x 24 in) hose kit separately.

Oil | Gear Lube | ATF

7 Year Warranty!

Ideal for Medium-Sized Shops with High-Pressure Oil Transfer

Install the Fire-Ball 300 in high-pressure, medium-volume oil dispense applications such as automotive dealerships, fast lube centers and service shops. A three inch differential air motor ensures smooth pumping, and the smooth double-acting pump design provides reliable fluid flow and accurate dispense.

Durable Casting

Thick cast aluminum air motor housing offers unmatched durability.

Fewer Repairs

Fewer moving parts in the air motor assembly means less downtime and low repair cost.

Superior Sealing

Non-metallic poppet valves offer positive sealing performance, even with contaminated "dirty" air environments for long life without repair.

Extended Seal Life

In-line pump design aligns the air motor piston and fluid piston rods to maximize seal life.

Corrosion-Resistant

Corrosion-resistant design utilizes liquid nitriding, nickel plating, stainless steel, aluminum and chrome on key components for longer life.

Typical Applications

- Automotive dealerships
- Fast lube centers
- Service shops
- Heavy-duty dealerships
- Fleet services facilities
- In-plant
- Lube trucks
- Mining

Typical Fluids Handled

- Petroleum- and synthetic-based oils (motor, gear and ATF)

Pump Performance

Fire-Ball 300 5:1 Pumps

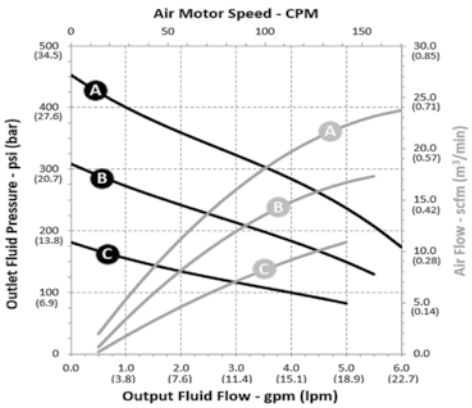

Inlet Air Pressures:

- A = 100 psi (6.9 bar)
- B = 70 psi (4.8 bar)
- C = 40 psi (2.8 bar)

Test Fluid : ISO 46 Oil

Technical Specifications

Fluid Pressure Ratio	5:1
Air Motor Effective Diameter	3 in (76.2 mm)
Maximum Fluid Working Pressure	900 psi (62 bar / 6.2 MPa)
Approximate Free Flow Rate @ 100 psi	12.1 gal/min (46 liters/min)
Output per Cycle	133 cc
Approximate Air Use and Flow @ 100 psi (80 cpm)	16 scfm @ 2.8 gpm (0.45 m^3/min @ 10.6 lpm)
Air Inlet	3/8 in NPT(F)
Fluid Inlet	1-1/2 in NPT(F)
Fluid Outlet	1/2 in NPT(F)
Air Operation Range	40 psi to 180 psi (2.8 bar to 12 bar)
Maximum Recommended Pump Speed	70 cpm
Cycles per Gallon (Liter)	28.4 (7.5)
Wetted Parts	Steel, polyurethane, aluminum, Buna-N
Sound Pressure Level	77.8 dB(A)
Sound Power Level	85.6 dB(A)
Approximate Weight	17 lb (7.7 kg)
Instruction Manual	306518

Ordering Information

Fire-Ball 300 5:1 Pumps

Part Number	Description
203876	5:1 Universal oil pump
203872	5:1 Oil pump, 16 gal (120 lb) drum size, for cover mount
203857	5:1 Oil pump, 55 gal (400 lb) drum size, for cover mount
204254	5:1 Oil pump, 55 gal (400 lb) drum size, bung mount
222087	5:1 Oil pump, 275 gal (1,040 lb) tank size, bung mount

Fire-Ball 300 5:1 Oil Pump Packages

Oil | Gear Lube | ATF

Ordering Information

Oil Pump Packages

Package Number	225728*	225094**	225642**	225640**	225931**	225852**
Ratio	5:1	5:1	5:1	5:1	5:1	5:1
Package Type	Portable	Cover-mounted	Cover-mounted	Bung-mounted	Bung-mounted	Universal
Maximum Container Size	16 gal (60 l)	16 gal (60 l)	55 gal (200 l)	55 gal (200 l)	275 gal (1,040 l)	Universal
Pump	203872	203872	203857	204254	222087	203876
Meter Type	Manual	–	–	–	–	
Meter Part Number	25M413	–	–	–	–	
Meter Extension	Rigid	–	–	–	–	
Dispense/ Hose Fitting Kit	237075	222063	222063	222063	222063	222062
Fluid Hose Size	1/2 in x 6 ft (12.7 mm x 1.8 m)	1/2 in x 6 ft (12.7 mm x 1.8 m)	1/2 in x 6 ft (12.7 mm x 1.8 m)	1/2 in x 6 ft (12.7 mm x 1.8 m)	1/2 in x 6 ft (12.7 mm x 1.8 m)	1/2 in x 1.5 ft (12.7 mm x 0.46 m)
Air Hose Size	–	3/8 in x 6 ft (9.5 mm x 1.8 m)	3/8 in x 6 ft (9.5 mm x 1.8 m)	3/8 in x 6 ft (9.5 mm x 1.8 m)	3/8 in x 6 ft (9.5 mm x 1.8 m)	3/8 in x 1.5 ft (9.5 mm x x 0.46 m)
Air Regulator	224512	224512	224512	–	–	–
Cover	24R350	24R350	200326	–	–	–
Caster Base	203622	–	–	–	–	–
Bung Adapter	–	–	–	222308	222308	–
Instruction Manual	307884	307883	307883	307883	307883	306520

*Order low-level cut-off (203688) (1-1/2 in NPT) separately for metered dispense systems. Use 3/8 in (9.5 mm) installation kit (224512) as required.
**Order low-level cut- off (203688) (1-1/2 in NPT) separately for metered dispense systems. Use 3/8 in (9.5 mm) air regulator (109075) as required; must be ordered separately.

Ordering Information

Bulk Oil Dispensing Packages

Package Number	241633*	224541*	244038*	224534*
Ratio	5:1	5:1	5:1	5:1
Dispensing Location	–	–	–	Bench/Top Tank
Pump	203876	203876	203876	203876
Regulator/Gauge	109075	109075	109075	109075
Nipple	156849	156849	156849	156849
Bung Adapter	222308	222308	222308	222308
Reel Size	1/2 in x 35 ft	1/2 in x 50 ft	1/2 in x 50 ft	1/2 in x 50 ft
Reel Type	SDX	SDX	SDX	SDX
Hose Reel	SDM33B	SDM6HB	SDM6HB	SDM6HB
Type of Meter	SD	SD	SD	SD
Manual/Preset	Manual	Manual	Preset	Manual
Meter	25M404	25M404	26C384	25M404
90° Swivel	–	–	–	157416
Air Filter	–	–	–	106148
Drain Valve	–	–	–	127711
Hose	–	220598	220598	222063
Thermal Relief Valve	–	–	–	237893
Hose Reel Inlet Kit (Not Included)	218549	218549	218549	218549

*Order (218549) (1/2 in x 24 in) hose reel inlet kit separately.

Package 224534 installed on a bulk tank (not included in package).

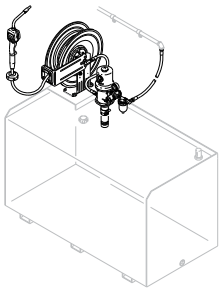

Fire-Ball 300 5:1 Oil Pump Packages

Oil | Gear Lube | ATF

Ordering Information

Lube Truck Packages

Package Number	222086*	206655*	204264*
Ratio	5:1	5:1	5:1
Package Type	Lube truck	Lube truck	Lube truck
Maximum Container Size	16 gal (60l) open-head	55 gal (200l) closed-head	55 gal (200l) closed-head
Pump	203872	203857	204254
Dispense/ Hose Fitting Kit	222063	222063	222063
Fluid Hose Size	1/2 in x 6 ft (12.7 mm x 1.8 m)	1/2 in x 6 ft (12.7 mm x 1.8 m)	1/2 in x 6 ft (12.7 mm x 1.8 m)
Cover	222060	207367	–
Pump Clamp	–	–	204095
Hold Down Kit	222061	207361	207361
Bung Adapter	–	–	224579
Instruction Manual	307883	307883	307883

*Order 3/8 in (9.5 mm) air regulator and gauge (109075) separately.

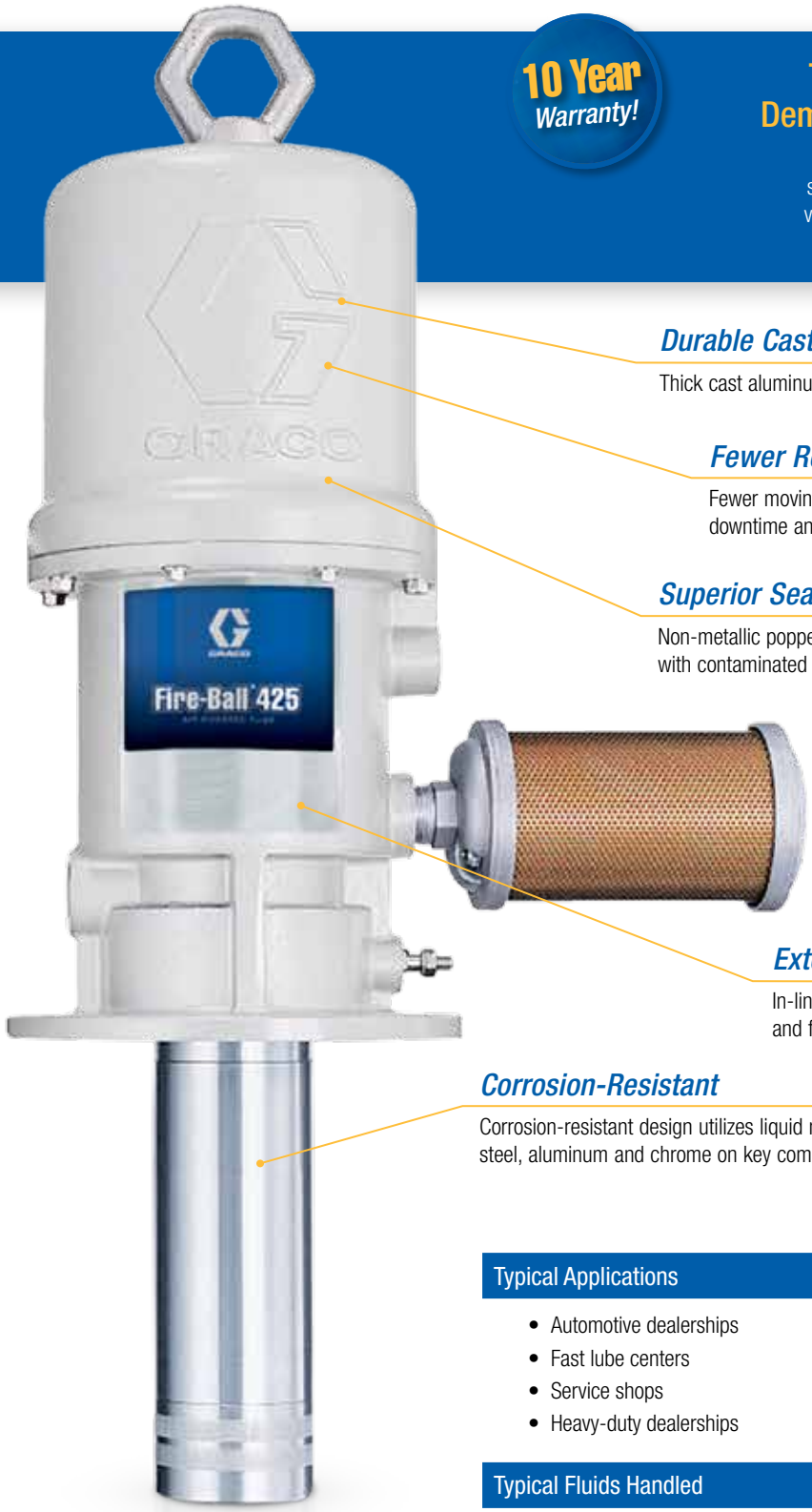

10 Year Warranty!

The Pump of Choice for Your Most Demanding High-Volume Applications

The Fire-Ball 425 features a 4.25 inch air motor to supply the power you need for long pipe runs and higher-volume dispensing. An ideal choice for applications where multiple dispenses happen at the same time.

Durable Casting

Thick cast aluminum air motor housing offers unmatched durability.

Fewer Repairs

Fewer moving parts in the air motor assembly means less downtime and low repair cost.

Superior Sealing

Non-metallic poppet valves offer positive sealing performance, even with contaminated “dirty” air environments for long life without repair.

Extended Seal Life

In-line pump design aligns the air motor piston and fluid piston rods to maximize seal life.

Corrosion-Resistant

Corrosion-resistant design utilizes liquid nitriding, nickel plating, stainless steel, aluminum and chrome on key components for longer life.

Typical Applications

- Automotive dealerships
- Fast lube centers
- Service shops
- Heavy-duty dealerships
- Fleet services facilities
- In-plant
- Lube trucks
- Mining

Typical Fluids Handled

- Petroleum- and synthetic-based oils (motor, gear and ATF)

Fire-Ball 425 Oil Pump Packages

Oil | Gear Lube | ATF

Pump Performance

Fire-Ball 425 3:1 Pumps

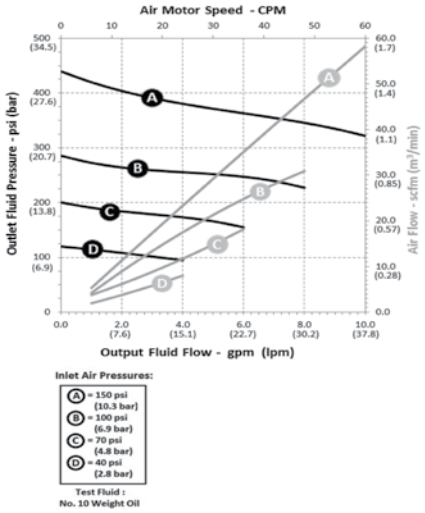

Fire-Ball 425 6:1 Pumps

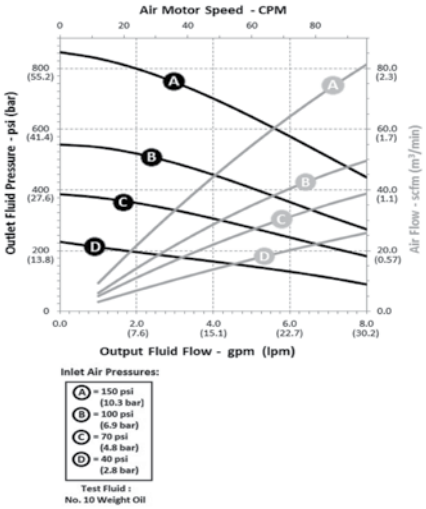

Fire-Ball 425 10:1 Pumps

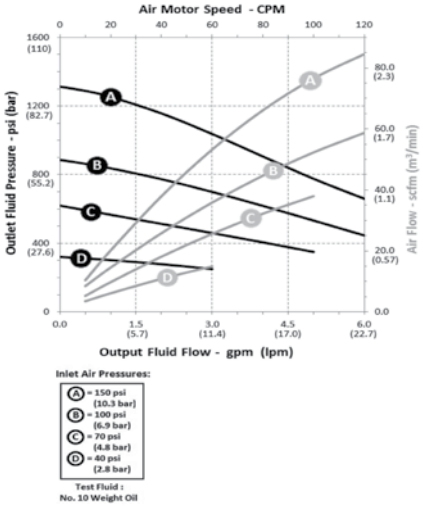

Technical Specifications

Fluid Pressure Ratio	3:1	6:1	10:1
Air Motor Effective Diameter	4.25 in (107.9 mm)	4.25 in (107.9 mm)	4.25 in (107.9 mm)
Maximum Fluid Working Pressure	540 psi (37 bar / 3.7 MPa)	1,100 psi (76 bar / 7.6 MPa)	1,800 psi (124 bar / 12.4 MPa)
Approximate Free Flow Rate @ 100 psi	28.7 gal/min (109 liters/min)	17.1 gal/min (65 liters/min)	11.7 gal/min (44 liters/min)
Output per Cycle	631 cc	261 cc	189 cc
Approximate Air Use and Flow @ 100 psi (80 cpm)	43 scfm @ 13.4 gpm (1.23 m³/min @ 50.6 lpm)	44 scfm @ 6.7 gpm (1.25 m³/min @ 25.4 lpm)	45 scfm @ 4.0 gpm (1.27 m³/min @ 15.2 lpm)
Air Inlet	1/2 in NPT(F)	1/2 in NPT(F)	1/2 in NPT(F)
Fluid Inlet	1-1/2 in NPT(F)	1-1/2 in NPT(F)	1-1/2 in NPT(F)
Fluid Outlet	3/4 in NPT(F)	3/4 in NPT(F)	3/4 in NPT(F)
Air Operation Range	40 psi to 180 psi (2.8 bar to 12 bar)	40 psi to 180 psi (2.8 bar to 12 bar)	40 psi to 180 psi (2.8 bar to 12 bar)
Maximum Recommended Pump Speed	66 cpm	78 cpm	60 cpm
Cycles per Gallon (Liter)	6 (1.6)	14.5 (3.8)	20 (5.3)
Wetted Parts	Steel, polyurethane, aluminum, nitrile	Steel, polyurethane, aluminum, nitrile	Steel, polyurethane, aluminum, nitrile
Sound Pressure Level	82 dB(A)	79.5 dB(A)	78 dB(A)
Approximate Weight	46 lb (20.9 kg)	35 lb (15.9 kg)	29 lb (13.2 kg)
Instruction Manual	308485	308608	308655

Ordering Information

Fire-Ball 425 Pumps

Part Number	Description
237526	3:1 Universal oil pump
238108	6:1 Universal oil pump
205626	10:1 Universal oil pump
222065	10:1 Oil pump, 55 gal (400 lb) drum size, cover mount
222095	10:1 Oil pump, 55 gal (400 lb) drum size, bung mount

Ordering Information

Oil Pump Packages

Package Number	244846	244628*	244847	225782**	225786**	225853**
Package Type	Wall-mounted	Wall-mounted	Wall-mounted	Cover-mounted	Bung-mounted	Universal supply
Maximum Container Size	Universal	Universal	Universal	55 gal (200 l)	55 gal (200 l)	Universal
Ratio	3:1	6:1	10:1	10:1	10:1	10:1
Pump	237526	238108	205626	222065	222095	205626
Hose/Fitting Kit	222068	222068	222068	222066	222066	222068
Fluid Hose Size	3/4 in x 1.5 ft	3/4 in x 1.5 ft	3/4 in x 1.5 ft	3/4 in x 6 ft	3/4 in x 6 ft	3/4 in x 1.5 ft
Air Hose Size	1/2 in x 1.5 ft	1/2 in x 1.5 ft	1/2 in x 1.5 ft	1/2 in x 6 ft	1/2 in x 6 ft	1/2 in x 1.5 ft
Cover	–	–	–	200326	–	–
Filter, Regulator, Lubricator [FRL]	217072	217072	217072	–	–	–
Air Shutoff Valve	110225	110225	110225	–	–	–
Fluid Shutoff Valve	108537	108537	108537	–	–	–
Wall Mount Bracket	238245	238245	238245	–	–	–
Instruction Manual	309351	309351	309351	307883	307883	306520

*Order low-level cut-off (203688) (1-1/2 in NPT) separately for metered dispense systems.
**Order low-level cut-off (203688) (1-1/2 in NPT) separately for metered dispense. Use 1/2 in (12.7 mm) air regulator (104266) and air pressure gauge (100960) as required; must be ordered separately.

Fire-Ball 425 Oil Pump Packages

Oil | Gear Lube | ATF

Ordering Information

Lube Truck Packages

Package Number	206656*	222067*
Ratio	10:1	10:1
Package Type	Lube truck	Lube truck
Maximum Container Size	55 gal (200 l) closed-head	55 gal (200 l) closed-head
Pump	222065	222095
Dispense/ Hose Fitting Kit	222066	222066
Fluid Hose Size	1/2 in x 6 ft (12.7 mm x 1.8 m)	1/2 in x 6 ft (12.7 mm x 1.8 m)
Offset Cover	207367	–
Pump Clamp	–	204095
Hold Down Kit	207361	207361
Bung Adapter	–	224579
Instruction Manual	307883	307883

*Order 1/2 in (12.7 mm) air regulator (104266) and gauge (100960) separately.

5 Year Warranty!

Used for Low-Volume Transfer of Petroleum-Base Lubricants

This air-operated piston pump is ideal for pumping petroleum and synthetic-based oils and provides a continuous duty flow rate of up to 5 gpm.

High-Quality Air Motor

Differential air motor ensures smooth pumping.

Fewer Repairs

In-line design with fewer moving parts in the air motor assembly means less downtime and low repair cost.

Reliable Fluid Flow

Double-acting pump provides reliable fluid flow.

Durable

Rated for continuous duty in challenging applications.

Typical Applications

- Automotive dealerships
- Fast lube centers
- Service shops
- Heavy-duty dealerships
- Fleet services facilities
- In-plant
- Lube trucks
- Mining

Typical Fluids Handled

- Petroleum- and synthetic-based oils (motor, gear and ATF)

Pump Performance

Fast-Ball 1:1 Pumps

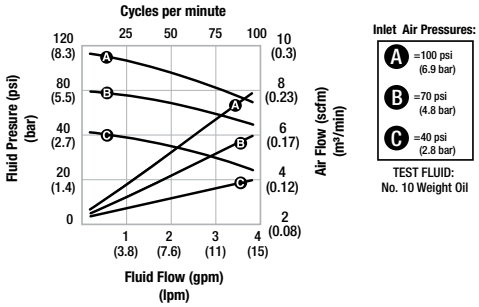

Fast-Ball 1:1 Oil Pumps

Oil | Gear Lube | ATF

Technical Specifications

Fluid Pressure Ratio	1:1
Air Motor Effective Diameter	1.4 in (35.6 mm)
Maximum Fluid Working Pressure	180 psi (12.5 bar / 1.25 MPa)
Approximate Free Flow Rate @ 100 psi	5 gal/min (19 liters/min)
Output per Cycle	151 cc
Approximate Air Use and Flow @ 100 psi (80 cpm)	7 scfm @ 3.1 gpm (0.20 m³/min @ 11.7 lpm)
Air Inlet	1/4 in NPT(F)
Fluid Inlet	1-1/2 in NPT(F)
Fluid Outlet	3/4 in NPT(F)
Air Operation Range	40 psi to 180 psi (2.8 bar to 12.4 bar)
Maximum Recommended Pump Speed	100 cpm
Cycles per Gallon	25 cpg
Cycles per Liter	6.6 cpl
Wetted Parts	CS, polyurethane
Sound Pressure Level	74.9 dB(A)
Sound Power Level	83.5 dB(A)
Approximate Weight	8 lb to 14 lb (3 kg to 7 kg)
Instruction Manual	307906

Ordering Information

Pumps

Pump Number	222103	222104	222051
Ratio	1:1	1:1	1:1
Type of Package	Bung-mounted	Bung-mounted	Universal
Container Size	55 gal (200 l)	275 gal (1,040 l)	Universal
Bung Adapter	222308	222308	–
Instruction Manual	307906	307906	307906

Pump Packages

Package Number	222602	239702
Ratio	1:1	1:1
Type of Package	Non-metered dispense	Metered dispense
Container Size	55 gal (200 l)	55 gal (200 l)
Pump	222103	222103
Dispense Kit	218115	239703
Regulator Assembly	218316	218316
Hose	109125	–
Hose Length	6 ft (1.8 m)	–
Bung Adapter	222308	222308
Instruction Manual	307637	307637

Use the quick-reference guide below to determine the part and accessory options available for our most popular oil pumps.

Oil Pump Mounting and Accessory Guide

Pump	Fast-Ball 1:1	Mini Fire-Ball 225 3:1	Fire-Ball 300 5:1	Fire-Ball 425 3:1	Fire-Ball 425 6:1	Fire-Ball 425 10:1
Bung Adapter	222308	222308	222308	–	–	222308
Connection Hose Kit	222118 (18 in / 4537 cm) 222119 (72 in / 182.8 cm)	222062 (18 in / 45.7 cm) 222063 (72 in / 182.8 cm)	222062 (18 in / 45.7 cm) 222063 (72 in / 182.8 cm)	238246 (24 in / 60.9 cm)	238246 (24 in / 60.9 cm)	222068 (18 in / 4537 cm) 222066 (72 in / 182.8 cm)
Wall Mounting Bracket	203987	203987	203987	238245	238245	203987
Thermal Relief Kit*	–	235998	237893	237601	240429	240429
Air Regulator and Gauge	110147	109075	109075	104266 / 100960	104266 / 100961	104266 / 100962
Air Filter	110146	106148	106148	106149	106149	106149
Air Lubricator	110148	214847	214847	214848	214848	214848
Filter, Regulator, Lubricator, and Gauge	110149	110150	110150	217072	217072	217072
Airline Shutoff Valve	110223	110224	110224	110225	110225	110225
Fluid Shutoff Valve	108537	108458	108458	108537	108537	108537
Fluid Outlet Filter	240417	240417	240417	101078	–	–
Low-Level Cutoff	203688	203688	203688	203688	203688	203688
Suction Hose Kit	236054	236054	236054	–	–	–

*Required

Oil Pump Accessories

Ordering Information

Bleed-Type Air Shut-Off Valves

Part Number	Description
110223	1/4 in NPT
110224	3/8 in NPT
110225	1/2 in NPT
110226	3/4 in NPT

Bung Adapters

	Part Number	Description	Compatible Pumps	Includes				
				Double Tap bushing	Bushing Sleeve	1 ft x 3/8 in Hose	90° 3/8 in Adapter	Thumb Screw
	222308	Allows direct mounting of all universal length and extended pumps to standard 2 NPT drum bung	Fast-Ball 1:1 Mini Fire-Ball 225 3:1 Fire-Ball 300 5:1 Fire-Ball 425 10:1	–	–	–	–	–
	187754	Acetal bung adapter	All pumps	–	–	–	–	100220
	176684	Bung adapter for suction kit 203992	–	–	–	–	–	100220
	238125	For mounting universal pumps to tanks	Mini Fire-Ball 225 3:1 Fire-Ball 300 5:1 Fire-Ball 425 10:1	191075	172405	238370	155494	–

Carts

Part Number	Compatible Container Size
203650	5 gal (20 l) 10 gal (40 l) 16 gal (60 l)
222243	120 lb (55 kg)
111470	55 gal (200 l)

Clamps

Part Number	Description	Compatible Pumps
203156	Used to hold pump securely to the edge of an open top drum	Fast-Ball 1:1 Mini Fire-Ball 225 3:1 Fire-Ball 300 5:1 Fire-Ball 425 6:1 Fire-Ball 425 10:1

Dispense Kits for Mini Fire-Ball and Fire-Ball 300 Pumps

Part Number	Description	Hose Length	Includes		
			Fluid Hose	Manual SD Gear Lube Valve	Manual
237075	Use with portable lubricators powered by Fire-Ball 300 Pump	6 ft	220591	255349	307884

Ordering Information

Downtube – Universal

Part Number	Description
15C502	1-1/2 in ID tube marked for standard container lengths from 20 in to 41 in (.51 m to 1.04 m)

Drum Covers

Part Number	Container Size	Compatible Pumps
200326	55 gal (200 l)	Mini Fire-Ball 225 3:1 Fire-Ball 300 5:1 Fire-Ball 425 10:1
24R350	16 gal (60 l)	Fast-Ball 1:1 Mini Fire-Ball 225 3:1 Fire-Ball 300 5:1 Fire-Ball 425 3:1, 6:1, 10:1
222058	5 gal (20 l)	Fast-Ball 1:1 Mini Fire-Ball 225 3:1 Fire-Ball 300 5:1, 15:1
160754	55 gal (200 l) 16 gal (60 l) 5 gal (20 l)	Bung-mounted pumps

Drum Elevator

Part Number	Description	Includes		
		Cover Support	Drum Elevator	Air Control Kit
241663	Air-powered elevator to speed up 55 gal (200 l) drum changes	207562	204385	207561

Fluid Shut-Off Valves

Part Number	Description
108458	1/2 in NPT
108537	3/4 in NPT
110314	1 in NPT

Fluid T-Strainers

Part Number	Description
240417	1/2 in inlet, 60 mesh strainer, which prevents foreign material from entering dispense lines
240418	3/8 in inlet, 60 mesh strainer, which prevents foreign material from entering dispense lines
238433	40 mesh replacement element, 3 count
238434	40 mesh replacement element, 25 count
238431	60 mesh (standard) replacement element, 3 count
238432	60 mesh (standard) replacement element, 25 count
238429	100 mesh replacement element, 3 count

Ordering Information

Fluid Y-Strainers

Part Number	Description
110877	1/2 in NPT inlet/outlet strainer, which filters material before entering the pump
110906	1/2 in NPT inlet/outlet strainer, replacement screen
101078	3/4 in NPT inlet/outlet strainer, which filters material before entering the pump
180199	3/4 in NPT inlet/outlet strainer, replacement screen
110878	1 in NPT inlet/outlet strainer, which filters material before entering the pump
110907	1 in NPT inlet/outlet strainer replacement screen

Hose and Fitting Kits for Mini Fire-Ball 225 and Fire-Ball 300 5:1

	Part Number	Description	Connection Length	Includes			
				Air Hose	Air Hose Swivel Elbow	Fluid Hose	Fluid Hose Swivel Elbow
	222062	For connecting wall-mounted pumps to piping	18 in	204560	155494	220598	155470
	222063	Use with drum-mounted pumps	6 ft	203320	155494	220591	155470

Hose and Fitting Kits for Fire-Ball 425 Pumps

	Part Number	Description	Hose Length	Package Includes				
				Air Hose	Air Hose Swivel Elbow	Fluid Hose	Fluid Hose Swivel Elbow	Manual
	222068	For connecting wall-mounted Fire-Ball 425 10:1 pump to piping	15 in	218093	155470	109108	160327	306520
	238246	For connecting wall-mounted Fire-Ball 425 3:1 and 6:1 pumps to piping	24 in	218903	155470	238247	160327	306520
	222066	For use with drum-mounted Fire-Ball 425 10:1 pump	6 ft	205418	155470	109105	160327	307883

Ordering Information

Low-Level Cutoffs for Fast-Ball and Fire-Ball Pumps

	Part Number	Description
	203688	1-1/2 in NPT cutoff, which prevents air from entering pump when fluid supply from pump is exhausted

Portable Bases

	Part Number	Description	Compatible Container Size
	205054	Band dolly	5 gal (20 l)
	204144	Band dolly	10 gal (40 l) 16 gal (60 l)
	203622	Caster base	5 gal (20 l) 10 gal (40 l) 16 gal (60 l)

Runaway Valve

Prevents pump damage by automatically closing the air line to stop the pump when a runaway pump condition occurs due to an empty barrel or hose leak.

	Part Number	Inlet
	224040	3/4 in NPT(fbe)

Sealed Bung Adapters

	Part Number	Fire-Ball Length	Adapter Inside Diameter	Compatible Pumps
	204076	Full length	2.140 in	Mini Fire-Ball 225 3:1
	224579	Universal length	2.159 in	All except Mini Fire-Ball 225 3:1

Suction Kits

	Part Number	Description	Includes		
			Bung Adapter	Bushing Pipe	6 ft Hose
	236054	Allows use of Fast-Ball, Mini-Fire-Ball and Fire-Ball universal pumps to work with barrels	188845	101496	109105

Oil Pump Accessories

Ordering Information

Suction Tubes

Part Number	Container Size	Type of Mount	Compatible Pumps	Includes		
				Extension Size	Extension	Foot Spacer
238592	16 gal (60 l)	Cover-mounted	Fast-Ball 1:1 Mini Fire-Ball 225 3:1 Fire-Ball 300 5:1 Fire-Ball 425 10:1	14-1/2 in	191126	110127
238593	55 gal (200 l)	Cover-mounted		21-3/4 in	191128	110127
238595	55 gal (200 l)	Bung-mounted		26 in	191130	110127
238596	275 gal (1,100 l)	Bung-mounted		36 in	191131	110127

Thermal Relief Valve Kits

Part Number	Pressure Rating	Compatible Pumps	Includes			
			Valve	Bung Adapter	Swivel	Hose
235998	600 psi (41 bar)	Mini Fire-Ball 225 3:1	112174	191075	155494	238370
237893	900 psi (62 bar)	Fire-Ball 300 5:1	102527	191075	155494	238370
248296	900 psi (62 bar)	Fire-Ball 300 5:1	102527	–	–	109163
237601	600 psi (41 bar)	Fire-Ball 425 3:1	112174	191075	155494	238370
240429	1,600 psi (110 bar)	Fire-Ball 425 6:1 Fire-Ball 425 10:1	102527	191075	155494	238370
248324	1,600 psi (110 bar)	Fire-Ball 425 6:1 Fire-Ball 425 10:1	113053	–	–	109163

Tools for Working on Fire-Ball Air Motors

Part Number	Description
207579	Padded pliers
171818	Poppet gauge
168085	Insert tool

Wall-Mounting Brackets

Part Number	Description	Compatible Pumps
203987	Clamps onto universal pump tube	Fast-Ball 1:1 Mini Fire-Ball 300 3:1 Fire-Ball 300 5:1 Fire-Ball 425 10:1
238245	Mounts directly to pump flange	Fire-Ball 425 3:1, 6:1, 10:1
236778	Provides mounting to wall surface by flange	Fire-Ball 425 3:1

Move Large Amounts of Oil Fast

Tested to outperform and outlast all other pumps on the market – with its long-life design and intuitive, easy-to-use controls – the NXT High-Flo pump is the best value for the money. Fewer parts, faster repairs and long-lasting durability.

Optional DataTrak™ Control

Intuitive, easy-to-use DataTrak control gives you pump diagnostics, material usage tracking and pump runaway protection.

NXT Air Motor

Modular design for easier maintenance with rugged body armor that won't rust or dent.

Modular Air Valves

Easy-to-repair valve eliminates stalling and contains de-icing controls.

Integrated Air Controls

Easy-turn, lockable regulator is front-mounted for easy access. Compact and modular with built-in filtration.

Piston Valve with Floating Piston Seal

For maximum pressure balance over a range of material viscosities.

Typical Applications

- Fleet service facilities
- In-plant
- Mining

Typical Fluids Handled

- Petroleum- and synthetic-based oils (motor, gear and ATF)

Pump Performance

NXT 3.5:1 High-Flo Pumps

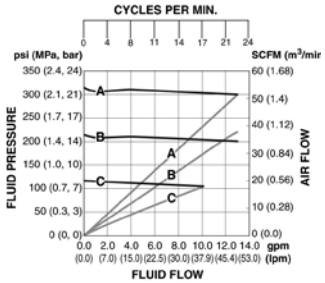

Inlet Air Pressures:

- A =100 psi (6.9 bar)
- B =70 psi (4.8 bar)
- C =40 psi (2.8 bar)

TEST FLUID:
No. 10 Weight Oil

NXT 4.5:1 High-Flo Pumps

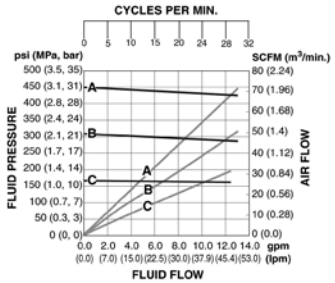

Inlet Air Pressures:

- A =100 psi (6.9 bar)
- B =70 psi (4.8 bar)
- C =40 psi (2.8 bar)

TEST FLUID:
No. 10 Weight Oil

Technical Specifications

Fluid Pressure Ratio	3.5:1	4.5:1
Air Motor Effective Diameter	7.5 in (191 mm)	7.5 in (191 mm)
Maximum Fluid Working Pressure	350 psi (24 bar / 2.4 MPa)	450 psi (31 bar / 3.1 MPa)
Output per Cycle	2,000 cc	1,500 cc
Air Inlet	3/4 in NPT(F)	3/4 in NPT(F)
Fluid Inlet	1-1/2 in NPT(F)	1-1/2 in NPT(F)
Fluid Outlet	1 in NPT(F)	1 in NPT(F)
Air Operation Range	20 psi to 100 psi (1.4 bar to 7 bar)	20 psi to 100 psi (1.4 bar to 7 bar)
Maximum Recommended Pump Speed	60 cpm	60 cpm
Cycles per Gallon (Liter)	1.9 (0.5)	2.5 (0.67)
Wetted Parts	Stainless steel, PTFE, leather, UHMWPE, carbon steel	Stainless steel, PTFE, leather, UHMWPE, carbon steel
Sound Pressure Level	77 dB(A)	77 dB(A)
Sound Power Level	87 dB(A)	87 dB(A)
Approximate Weight	99 lb (44.9 kg)	99 lb (44.9 kg)
Instruction Manuals	System – 312862 Pump – 311211 Pump Lower – 311690 Motor – 311238	System – 312862 Pump – 311211 Pump Lower – 311690 Motor – 311238

Ordering Information

Oil Pump Packages with DataTrak

Package Number with DataTrak	247888	247889
Ratio	3.5:1	4.5:1
Mounting	255143 (Wall)	255143 (Wall)
Pump with DataTrak and Thermal Relief Kit	24D590	24D591
Output per Cycle	2,000 cc	1,500 cc
Output at 60 CPM	31.5 gpm (119.2 lpm)	23.2 gpm (87.8 lpm)
Motor Size	NXT 3400	NXT 3400
Maximum Fluid Pressure	350 psi (24.1 bar)	450 psi (31 bar)
Maximum Air Input Pressure	100 psi (6.9 bar)	100 psi (6.9 bar)
System Manual	312862	312862
Pump Manual	311211	311211
Pump Lower Manual	311690	311690
Motor Manual	311238	311238
Pump Inlet Size	1-1/2 in NPT	1-1/2 in NPT
Pump Outlet Size	1 in NPT	1 in NPT
4 ft x 3/4 in Air Hose	110048	110048
6 ft x 1 in Fluid Hose	115042	115042
Instruction Manual	309351	309351

Oil Pump Packages without DataTrak

Package Number without DataTrak	24D602	24D603
Ratio	3.5:1	4.5:1
Mounting	255143 (Wall)	255143 (Wall)
Pump without DataTrak and Thermal Relief Kit	24D596	24D597
Output per Cycle	2,000 cc	1,500 cc
Output at 60 CPM	31.5 gpm (119.2 lpm)	23.2 gpm (87.8 lpm)
Motor Size	NXT 3400	NXT 3400
Maximum Fluid Pressure	350 psi (24.1 bar)	450 psi (31 bar)
Maximum Air Input Pressure	100 psi (6.9 bar)	100 psi (6.9 bar)
System Manual	312862	312862
Pump Manual	311211	311211
Pump Lower Manual	311690	311690
Motor Manual	311238	311238
Pump Inlet Size	1-1/2 in NPT	1-1/2 in NPT
Pump Outlet Size	1 in NPT	1 in NPT
4 ft x 3/4 in Air Hose	110048	110048
6 ft x 1 in Fluid Hose	115042	115042
Instruction Manual	309351	309351

Oil | Gear Lube | ATF

Move Large Amounts of Oil Fast

Tested to outperform and outlast all other pumps on the market – with its long-life design and intuitive, easy-to-use controls – the NXT Dura-Flo pump is the best value for the money. Fewer parts, faster repairs and long-lasting durability.

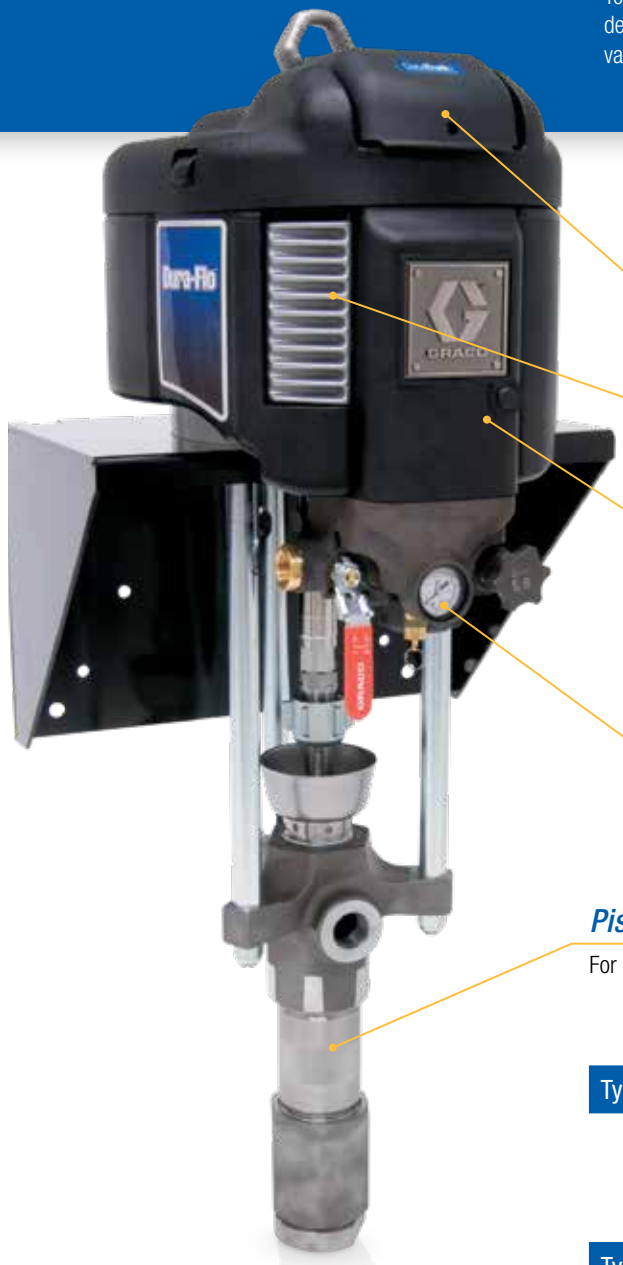

Optional DataTrak™ Control

Intuitive, easy-to-use DataTrak control gives you pump diagnostics, material usage tracking and pump runaway protection.

NXT Air Motor

Modular design for easier maintenance with rugged body armor that won't rust or dent.

Modular Air Valves

Easy-to-repair valve eliminates stalling and contains de-icing controls.

Integrated Air Controls

Easy-turn, lockable regulator is front-mounted for easy access. Compact and modular with built-in filtration.

Piston Valve with Floating Piston Seal

For maximum pressure balance over a range of material viscosities.

Typical Applications

- Fleet service facilities
- In-plant
- Mining

Typical Fluids Handled

- Petroleum- and synthetic-based oils (motor, gear and ATF)

Pump Performance

Inlet Pressures:

- **A** = 100 psi (6.9 bar) air pressure or 1500 (103 bar) hydraulic oil pressure
- **B** = 70 psi (4.8 bar) air pressure or 1050 (72 bar) hydraulic oil pressure
- **C** = 40 psi (2.8 bar) air pressure or 600 (41 bar) hydraulic oil pressure

TEST FLUID: No. 10 Weight Oil

NXT Dura-Flo 6:1 Pumps

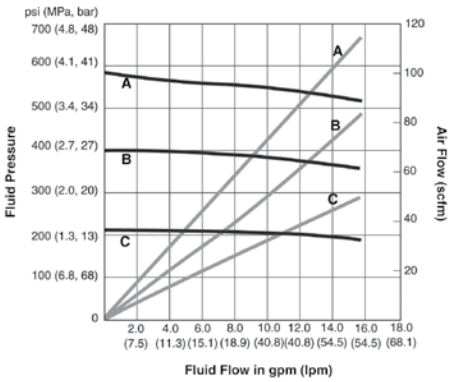

NXT Dura-Flo 10:1 Pumps

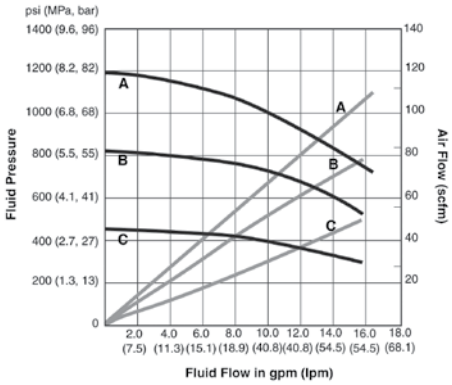

NXT Dura-Flo 12:1 Pumps

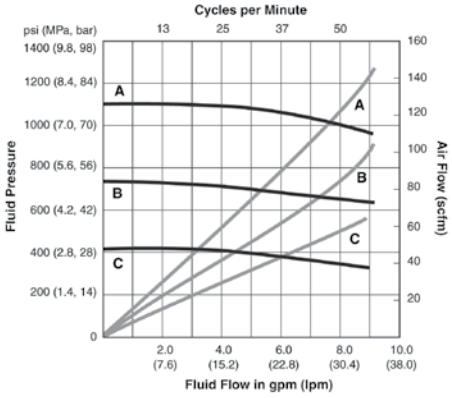

NXT Dura-Flo 23:1 Pumps

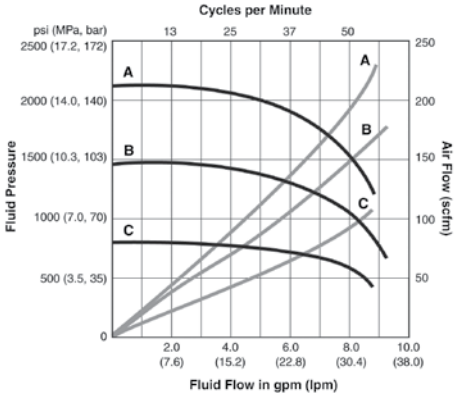

Oil Gear Lube ATF

Technical Specifications

Fluid Pressure Ratio	6:1	10:1	12:1	23:1
Air Motor Effective Diameter	7.5 in (191 mm)	10.375 in (264 mm)	7.5 in (191 mm)	10.375 in (264 mm)
Maximum Fluid Working Pressure	620 psi (43 bar / 4.3 MPa)	1,180 psi (81 bar / 8.1 MPa)	1,190 psi (82 bar / 8.2 MPa)	1,725 psi (119 bar / 11.9 MPa)
Output per Cycle	1,000 cc	1,000 cc	580 cc	580 cc
Air Inlet	3/4 in NPT(F)	3/4 in NPT(F)	3/4 in NPT(F)	3/4 in NPT(F)
Fluid Inlet	2 in NPT(F)	2 in NPT(F)	2 in NPT(F)	2 in NPT(F)
Fluid Outlet	1-1/2 in NPT(F)	1-1/2 in NPT(F)	1-1/2 in NPT(F)	1-1/2 in NPT(F)
Air Operation Range	20 psi to 100 psi (1.4 bar to 7 bar)	20 psi to 100 psi (1.4 bar to 7 bar)	20 psi to 100 psi (1.4 bar to 7 bar)	20 psi to 75 psi (1.4 bar - 5.2 bar)
Maximum Recommended Pump Speed	60 cpm	60 cpm	60 cpm	60 cpm
Cycles per Gallon (Liter)	3.8 (1.0)	3.8 (1.0)	6.5 (1.72)	6.5 (1.72)
Wetted Parts	Stainless steel, CS, chrome, zinc, nickel, Buna-N, tungsten carbide, nylon, UHMWPE, leather, PTFE, PEEK	Stainless steel, CS, chrome, zinc, nickel, Buna-N, tungsten carbide, nylon, UHMWPE, leather, PTFE, PEEK	Stainless steel, CS, chrome, zinc, nickel, tungsten carbide, ductile iron, acetal	Stainless steel, CS, chrome, zinc, nickel, tungsten carbide, ductile iron, acetal
Sound Pressure Level	77 dB(A)	80 dB(A)	77 dB(A)	80 dB(A)
Sound Power Level	87 dB(A)	90 dB(A)	87 dB(A)	90 dB(A)
Approximate Weight	113 lb (51.3 kg)	132 lb (59.9 kg)	92 lb (41.7 kg)	102 lb (46.3 kg)
Instruction Manuals	System – 312862 Pump – 311833 Pump Lower – 311717 Motor – 311238	System – 312862 Pump – 311833 Pump Lower – 311717 Motor – 311238	System – 312862 Pump – 311826 Pump Lower – 311825 Motor – 311238	System – 312862 Pump – 311826 Pump Lower – 311825 Motor – 311238

Ordering Information

Oil Pump Packages with DataTrak

Package Number with DataTrak	247890	247894	247891	247895
Ratio	6:1	10:1	12:1	23:1
Mounting	255143 (Wall)	255143 (Wall)	255143 (Wall)	255143 (Wall)
Pump with DataTrak and Thermal Relief Kit	24D592	24D595	24D593	–
Output per Cycle	1,000 cc	1,000 cc	580 cc	580 cc
Output at 60 CPM	17.4 gpm (65.9 lpm)	17.4 gpm (65.9 lpm)	9.2 gpm (34.8 lpm)	9.2 gpm (34.8 lpm)
Motor Size	NXT 3400	NXT 6500	NXT 3400	NXT 6500
Maximum Fluid Pressure	620 psi (42.7 bar)	1,180 psi (81.3 bar)	1,190 psi (82.1 bar)	1,725 psi (118.9 bar)
Maximum Air Input Pressure	100 psi (6.9 bar)	100 psi (6.9 bar)	100 psi (6.9 bar)	75 psi (5.2 bar)
System Manual	312862	312862	312862	312862
Pump Manual	311833	311833	311826	311826
Pump Lower Manual	311717	311717	311825	311825
Air Motor Manual	311238	311238	311238	311238
Pump Inlet Size	2 in NPT	2 in NPT	2 in NPT	2 in NPT
Pump Outlet Size	1-1/2 in NPT	1-1/2 in NPT	1-1/2 in NPT	1-1/2 in NPT
4 ft x 3/4 in Air Hose	110048	110048	110048	110048
6 ft x 1 in Fluid Hose	115042	115042	115042	115042
Instruction Manual	312862	312862	312862	312862

Oil Pump Packages without DataTrak

Package Number without DataTrak	24D604	24D608	24D605
Ratio	6:1	10:1	12:1
Mounting	255143 (Wall)	255143 (Wall)	255143 (Wall)
Pump without DataTrak and Thermal Relief Kit	24D598	24D601	24D599
Output per Cycle	1,000 cc	1,000 cc	580 cc
Output at 60 CPM	17.4 gpm (65.9 lpm)	17.4 gpm (65.9 lpm)	9.2 gpm (34.8 lpm)
Motor Size	NXT 3400	NXT 6500	NXT 3400
Maximum Fluid Pressure	620 psi (42.7 bar)	1,180 psi (81.3 bar)	1,190 psi (82.1 bar)
Maximum Air Input Pressure	100 psi (6.9 bar)	100 psi (6.9 bar)	100 psi (6.9 bar)
System Manual	312862	312862	312862
Pump Manual	311833	311833	311826
Pump Lower Manual	311717	311717	311825
Air Motor Manual	311238	311238	311238
Pump Inlet Size	2 in NPT	2 in NPT	2 in NPT
Pump Outlet Size	1-1/2 in NPT	1-1/2 in NPT	1-1/2 in NPT
4 ft x 3/4 in Air Hose	110048	110048	110048
6 ft x 1 in Fluid Hose	115042	115042	115042
Instruction Manual	312862	312862	312862

Oil | Gear Lube | ATF

Field-Proven, Energy-Efficient

Hydraulic Dyna-Star pumps provide reliable, quiet, ice-free performance at maximum pressure and low-flow rates and are up to three times more energy efficient than comparable compressed-air systems.

Built-In Reliability

Self-lubricating vertical design for long life and reliable operation in high vibration environments.

Quiet Hydraulic Motor

No need for add-on mufflers.

High-Efficiency Motor

Uses less hydraulic oil.

Typical Applications

- Service shops
- Heavy-duty dealerships
- Fleet services facilities
- In-plant
- Lube trucks
- Mining

Typical Fluids Handled

- Petroleum- and synthetic-based oils (motor, gear and ATF)

Technical Specifications

Fluid Pressure Ratio	1:1	1:1	1/4:1	1:1 Stainless Steel
Pump Number	224741	224742	236753	237653
Applications	Oil dispensing	Oil dispensing	Bulk oil transfer	Antifreeze dispensing
Drum Size	Universal	55 gal (200 l) Bung- or cover-mounted	Universal	Universal
Maximum Input Pressure	1,500 psi (102 bar)	1,500 psi (102 bar)	1,500 psi (102 bar)	1,000 psi (70 bar)
Maximum Fluid Input Volume	3 gpm (11.4 lpm)	3 gpm (11.4 lpm)	3 gpm (11.4 lpm)	3 gpm (11.4 lpm)
Maximum Output Flow Rate	3 gpm (11.4 lpm)	3 gpm (11.4 lpm)	10 gpm (37.9 lpm)	3 gpm (11.4 lpm)
Maximum Recommended CPM	60	60	60	60
Maximum Fluid Output Pressure	1,500 psi (102 bar)	1,500 psi (102 bar)	375 psi (25.1 bar)	1,500 psi (102 bar)
Hydraulic Supply Inlet	3/8 in NPT	3/8 in NPT	3/8 in NPT	3/8 in NPT
Hydraulic Return Outlet	3/4 in NPT	3/4 in NPT	3/4 in NPT	3/4 in NPT
Fluid Outlet	1/2 in NPT	1/2 in NPT	1/2 in NPT	1/2 in NPT
Fluid Inlet	1-1/2 in NPT	1-1/2 in NPT	1-1/2 in NPT	3/4 in NPT
Maximum Incoming Fluid Temp.	130°F (54°C)	130°F (54°°C)	130°F (54°C)	130°F (54°C)
Wetted Parts	Steel, copper, leather	Steel, copper, leather	Aluminum, steel, nitrile, polyurethane	Steel, copper, leather
Sound Pressure Level	77 dB(A)	77 dB(A)	77 dB(A)	77 dB(A)
Approximate Weight	24 lb (10.9 kg)	24 lb (10.9 kg)	48 lb (21.8 kg)	24 lb (10.9 kg)
Instruction Manual	308155	308155	308390	308155

Ordering Information

Dyna-Star Hydraulic Pumps

Part Number	Description
224741	1:1 Universal oil pump
224742	1:1 Oil pump for 55 gal (400 lb) drum size, bung- or cover- mounted
236753	1/4:1 Universal oil pump
237653	1:1 Universal stainless steel oil pump

Accessories

Drum Covers

Part Number	Description
200326	For 55 gal (200 l) drums
204574	For 16 gal (60 l) drums
222058	For 5 gal (20 l) pails
160754	For 5 gal (20 l), 16 gal (60 l) and 55 gal (200 l) bung-mounted pumps

Hydraulic Fluid Controls

Required for each pump.

	Part Number	Description
	236864	Dyna-Star fluid controls [1,500 psi (102 bar); 3 gpm (11.4 lpm)]. Includes manifold with pressure-reducing valve, flow-control valve, pressure gauge, shut-off ball valves, and 3 ft (0.9 m) supply and return hoses. Instruction manual 308395.
	237904	1:1 Dyna-Star thermal relief valve, 1,600 psi (110 bar)

Wall-Mounting Brackets

	Part Number	Description
	203987	For stubby/universal 1:1 Dyna-Star pump
	236778	For stubby/universal 1/4:1 Dyna-Star pump

Oil | Gear Lube | ATF

Field Proven, Energy Efficient

Hydraulic Power-Star pumps provide reliable, quiet, ice-free performance at maximum pressure and low flow rates and are up to three times more energy efficient than comparable compressed-air systems.

Built-In Reliability

Self-lubricating vertical design for long life and reliable operation in high vibration environments.

Quiet Hydraulic Motor

No need for add-on mufflers.

High-Efficiency Motor

Uses less hydraulic oil.

Typical Applications

- Service shops
- Heavy-duty dealerships
- Fleet services facilities
- In-plant
- Lube trucks
- Mining

Typical Fluids Handled

- Petroleum- and synthetic-based oils (motor, gear and ATF)

Technical Specifications

Fluid Pressure Ratio	1:1
Pump Number	236754
Applications	Bulk oil transfer
Drum Size	Universal
Maximum Input Pressure	1,500 psi (102 bar)
Maximum Fluid Input Volume	12 gpm (45.4 lpm)
Maximum Output Flow Rate	12 gpm (45.4 lpm)
Maximum Recommended CPM	60
Maximum Fluid Output Pressure	1,500 psi (102 bar)
Hydraulic Supply Inlet	3/4 in NPT
Hydraulic Return Outlet	1-1/4 in NPT
Fluid Outlet	1/2 in NPT
Fluid Inlet	1-1/2 in NPT
Maximum Incoming Fluid Temp.	130°F (54°C)
Wetted Parts	Iron, steel, stainless steel, nitrile, polyurethane
Sound Pressure Level	78 dB(A)
Approximate Weight	100 lb (45.4 kg)
Instruction Manual	308391

Ordering Information

Power-Star Hydraulic Pumps

Part Number	Description
236754	1:1 Universal oil pump

Accessories

Drum Covers

Part Number	Description
200326	For 55 gal (200 l) drums
204574	For 16 gal (60 l) drums
222058	For 5 gal (20 l) pails
160754	For 5 gal (20 l), 16 gal (60 l) and 55 gal (200 l) bung-mounted pumps

Hydraulic Fluid Controls

Required for each pump.

Part Number	Description
236865	Power-Star fluid controls [1,500 psi (102 bar); 12 gpm (45.4 lpm)]. Includes manifold with pressure-reducing valve, flow-control valve, pressure gauge, shut-off ball valves, and 3 ft (0.9 m) supply and return hoses. Instruction manual 308395.

Wall-Mounting Bracket

Part Number	Description
236778	For stubby/universal 1/4:1 Power-Star pump

Oil Gear Lube ATF

Ordering Information

16 Gallon (60 l) Metered and Non-Metered Dispensing Packages

Designed for manual dispensing of fluid oil from bulk containers to point of application.

Package Number	225880	225376	225384	225380	225378*
Fluids Handled	ATF	Gear lube	Gear lube	Gear lube	Gear lube
Package Type	Portable	Portable	Portable	Stationary	Portable
Pump Part Number	204867	204867	204867	204867	204867
Meter Dispense Kit	239707	239705	239705	–	–
Dispense Kit	–	–	–	214658	214658
Fluid Hose	–	–	6 ft x 1/2 in	6 ft x 1/2 in	6 ft x 1/2 in
Drum Cover	204574	204574	204574	204574	204574
Portable Base	203622	203622	–	–	203622
Cart	–	–	203650	–	–
Instruction Manual	306436	306436	306436	306436	306436

*Hydraulic; can be used for gear oil dispensing.

Ordering Information

Pail-Dispensing Package for 5 gal (20 l) Pails

Mounts on top of standard 5 gal (20 l) pail (pail not included). Dispenses 1.6 oz to 1.9 oz. (47.3 ml to 56.2 ml) per stroke.

Package Number	226289
Fluids Handled	Gear lube
Fluid Hose	4 ft (1.2 m)
Instruction Manual	306875

Pumping Bulk Lubricants from 16 gal (60 l) or 55 gal (200 l) Drums*

All pumps come with suction tube and bung adapter.

Package Number	114829	226290
Type of Pump	Lever[1]	Rotary[2]
Fluids Handled	Petroleum-based products, antifreeze	Petroleum-based products
Delivery Rate	0.1 gal (0.4 l) per downstroke	1 gal (3.7 l) per 18 cycles
Fluid Hose	–	–
Instruction Manual	–	306876

*Drums not included.

1 Telescopic suction tube mounts 2 in NPT bung opening of 16 gal (60 l) or 55 gal (200 l) drum. Package includes bung adapter and spout outlet

2 Package has adjustable 2 in NPT bung mounting to allow use with either 16 gal (60 l) or 55 gal (200 l) drum. Package includes bung adapter and spout outlet

Notes

OIL DISPENSE METERS

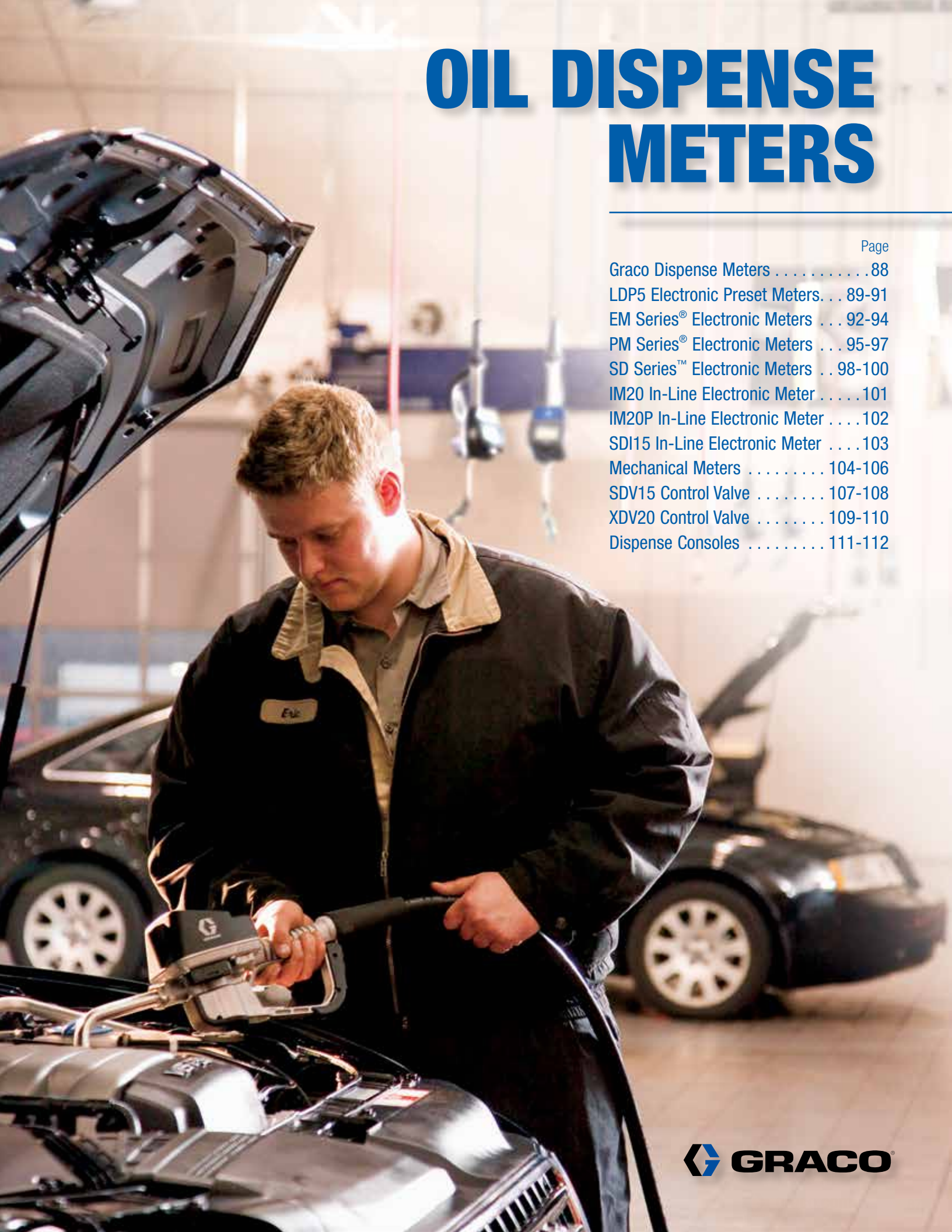

Page

Graco Dispense Meters 88
LDP5 Electronic Preset Meters. . . 89-91
EM Series® Electronic Meters . . . 92-94
PM Series® Electronic Meters . . . 95-97
SD Series™ Electronic Meters . . 98-100
IM20 In-Line Electronic Meter 101
IM20P In-Line Electronic Meter 102
SDI15 In-Line Electronic Meter 103
Mechanical Meters 104-106
SDV15 Control Valve 107-108
XDV20 Control Valve 109-110
Dispense Consoles 111-112

GRACO®

Graco Dispense Meters

	Fluid	Manual/ Preset	Maximum Working Pressure	Maximum Flow Rate	Intended Use	Warranty	Reference Pages
LDP5 Electronic Preset Meters	• Petroleum- and synthetic-based oils (motor, gear and ATF) • Antifreeze	Preset	1,000 psi (69 bar)	5 gpm (19 lpm)	Indoor	5 years overall (2 years electronics)	89-91
EM Series Electronic Meters	• Petroleum- and synthetic-based oils (motor, gear and ATF) • Antifreeze	Manual	1,500 psi (103.4 bar)	20 gpm (76 lpm)	Indoor/ Outdoor	5 years overall (3 years electronics)	92-94
PM Series Electronic Meters	• Petroleum- and synthetic-based oils (motor, gear and ATF) • Antifreeze	Preset	1,500 psi (103.4 bar)	20 gpm (76 lpm)	Indoor/ Outdoor	5 years overall (3 years electronics)	95-97
SD Series Electronic Meters	• Petroleum- and synthetic-based oils (motor, gear and ATF) • Antifreeze	Manual/ Preset	1,500 psi (103.4 bar)	14 gpm (53 lpm)	Indoor/ Limited Outdoor	7 years overall (3 years electronics)	98-100
IM20 In-Line Meters	• Petroleum- and synthetic-based oils (motor, gear and ATF) • Antifreeze	In-Line	1,500 psi (103.4 bar)	20 gpm (76 lpm)	Indoor/ Outdoor	5 years overall (3 years electronics)	101
IM20P In-Line Meter	• Petroleum- and synthetic-based oils (motor, gear and ATF) • Antifreeze	In-Line	1,500 psi (103.4 bar)	20 gpm (76 lpm)	Indoor/ Outdoor	1 year	102
SDI15 In-Line Meters	• Petroleum- and synthetic-based oils (motor, gear and ATF) • Antifreeze • Diesel exhaust fluid	In-Line	1,500 psi (103.4 bar)	15 gpm (56.8 lpm)	Indoor	7 years overall (3 years electronics)	103
Mechanical Meters	• Petroleum- and synthetic-based oils (motor, gear and ATF) • Antifreeze	Manual/ Preset	1,500 psi (103.4 bar)	8 gpm (30 lpm)	Indoor/ Outdoor	5 years	104-106
SDV15 Control Valves	• Petroleum- and synthetic-based oils (motor, gear and ATF) • Antifreeze	N/A	1,500 psi (103.4 bar)	15 gpm (56.8 lpm)	Indoor/ Outdoor	7 years	107-108
XDV20 Control Valves	• Petroleum- and synthetic-based oils (motor, gear and ATF) • Antifreeze	N/A	1,500 psi (103.4 bar)	20 gpm (76 lpm)	Indoor/ Outdoor	7 years	109-110

LDP5 Electronic Preset Meters

Perfect for Lower-Volume Service Applications

For use in small service shops, fast lubes and low-volume in-plant applications.

Up to 5 gpm (19 lpm)

Easy-to-Read LCD Screen

Keeps dispenses precise.

Operator Controls

Displays in quarts, pint, gallons or liters. Durable switches for long life.

Fluid Extension Kits

Choose from rigid or flexible extensions with automatic thermal compensating nozzle.

Rugged Meter Body

Superior impact resistance and long life.

Comfortable Handle

Ergonomically designed for operator comfort. Two-finger trigger with latching on preset models.

Fluid Swivel

1/2 inch fluid inlet.

Typical Applications

- Automotive dealerships
- Fast lube centers
- Service shops
- Fleet services facilities
- In-plant

Typical Fluids Handled

- Petroleum- and synthetic-based oils (motor, gear and ATF)
- Antifreeze

Technical Specifications

Flow Range*	0.1 gpm to 5 gpm (0.4 lpm to 19 lpm)
Maximum Working Pressure	1,000 psi (69 bar)
Units of Measure	Quarts, pints, gallons, liters (factory set to quarts)
Accuracy**	+/- 0.5%
Inlet	1/2 in NPT
Outlet	1/2 in NPT
Maximum Totalizer	999,999 gallons or liters
Maximum Recorded Dispense	999.9 units
Maximum Preset Volume	999.9 units (LDP5 only)
Operating Temperature Range	32°F to 120°F (0°C to 48.8°C)
Storage Temperature Range	-30°F to 120°F (-34.4°C to 48.8°C)
Outdoor Use	No
Battery	9 volt alkaline
Battery Life	One year
Wetted Parts	SST, nitrile rubber, zinc, CS, LCP
Meter Pressure Loss*	90 psi (6.2 bar) @ 5 gpm (19 lpm)
Dimensions (without extension)	11 in L x 3.25 in W x 3.25 H (28 cm L x 8.3 cm W x 8.3 cm H)
Weight	3 lb (1.36 kg)
Warranty	Five years overall, two years electronics
Instruction Manual	312668

*Tested in 10W oil at 70°F. Flow rates vary with fluid pressure, temperature, viscosity, inlet and nozzle type.

**At 2.5 gpm (9.5 lpm) @ 70°F (21°C) with 10 wt. oil and 1 gal (3.8 l) dispensed. May require recalibration. Out-of-box accuracy ±1.25%. Not recommended for in-line installation.

Oil | Gear Lube | ATF | Antifreeze

Ordering Information

LDP5 Electronic Preset Meters

Automatic nozzle included

	Extension	Inlet in (mm)	Part Number	Package Includes	
				Trigger Guard	Swivel Cover
	Flexible	1/2 (13)	258694	Yes	Yes
	Rigid		256216	Yes	Yes
	Flexible		255277	No	No

Nozzle Extension Kits

	Extension	Fluid	Nozzle Description	Part Number
	Rigid	Oil/Antifreeze	Automatic, thermally compensating	239949
		Gear lube	Automatic, thermally compensating	239950
		Gear lube	Automatic	238887
	Flexible	Oil/Antifreeze	Automatic, thermally compensating	239951
	Nozzle Only	Oil/Antifreeze/Gear lube	Automatic, thermally compensating	239829
		Oil/Antifreeze/Gear lube	Automatic	238371

Ordering Information

EM5/PM5 to LD Series Upgrade Kits

	Part Number	Description
	257350	EM5 to LDM5
	257351	PM5 to LDP5

Accessories

	Part Number	Description
	240416	Inlet swivel
	114017	Inlet filter, 80 mesh
	240453	Valve repair kit

Protective Boots with Trigger Guards

	Part Number	Description
	247759	Black
	243835	Red
	243836	Blue
	243837	Green
	247760	Yellow

Swivel Covers

	Part Number	Description
	191294	Black
	191287	Red
	191288	Blue
	191289	Green
	191295	Yellow

Hose Identification Wraps

Vinyl hose wrap for easy identification of meter fluid.

	Part Number	Description
	17S659	Red
	17S660	Blue
	17S661	Green
	17S662	Yellow
	17S663	White

EM® Series Electronic Manual Dispense Meters

Oil | Gear Lube | ATF | Antifreeze

Up to 20 gpm (76 lpm)

Low-Flow and High-Flow Manual Meters

Building on the heritage of Graco's first electronic meter, the EM Series features a robust design at an affordable price. Our legacy valve handle features a long-life valve design for years of dependable service. These meters are weather-rated and impact-resistant to withstand the harshest shop conditions.

Twist-Close Nozzle Prevents Leaking

Multiple extensions available including rigid, flexible and gear lube.

High-Flow Rates

Capable of up to 20 gpm.

Long Battery Life

Features upgraded electronics and easily replaceable AAA batteries.

Prevent Accidental Dispenses

Easy-to-hold locking handle.

Proven in Harsh Conditions

Sealed electronics (IP69K) are protected against direct pressure washing and dust.

Legacy Valve

1/2 and 3/4 inch inlets, compatible with oil, ATF, antifreeze and gear lube.

Typical Applications

- Automotive dealerships
- Service and fast lube centers
- Lube trucks
- Mining
- Heavy-duty dealerships
- Fleet service facilities
- In-plant

Typical Fluids Handled

- Petroleum- and synthetic-based oils (motor, gear and ATF)
- Antifreeze

Technical Specifications	EM8	EM20
Flow Range	0.25 to 8 gpm (0.95 to 30.3 lpm)	0.25 to 20 gpm (0.95 to 75.7 lpm)
Maximum Operating Pressure	1,500 psi (102 bar)	
Unit of Measure	Quarts, gallons, pints, liters	
Accuracy/Repeatability	±0.5%	
Inlet	1/2 NPT	1/2 NPT or 3/4 NPT
Outlet	3/4 straight thread O-ring boss	7/8 straight thread O-ring boss
Maximum Totalizer	19,999 units	
Maximum Recorded Dispense	19,999 units	
Operating Temperature Range	-22°F to 180°F (-30°C to 82°C)	
Storage Temperature Range	-40°F to 185°F (-40°C to 85°C)	
Outdoor Use	Yes – IP69k as per DIN 40050-9	
Battery	2 (AAA) alkaline or 2 (AAA) lithium	
Wetted Parts	Aluminum, stainless steel, carbon steel, acetal, nitrile rubber, Geolast™	
Meter Pressure Loss*	30 psi @ 6 gpm	85 psi @ 12 gpm
Dimensions	13 in L x 3.5 in W x 5.25 in H (33 cm L x 9 cm W x 13.3 cm H)	
Weight	3 lbs (1.36 kg)	3.1 lbs (1.39 kg)
Warranty	Five years overall, three years electronics and 1 year wear parts	
Instruction Manual	3A5588	

** Tested in 10W oil at 70°F (21°C). Flow rate varies with fluid pressure, temperature, viscosity, inlet fitting size and nozzle type.*
Geolast is a registered trademark of Advanced Elastomer Systems.

Ordering Information

		Extension	Inlet in (mm)	Nozzle Type	Part Number
EM8		Flexible	1/2 (13)	Non-drip, manual open/close	25C904
				Automatic, non-drip, quick-close	26C526
		Rigid		Non-drip, manual open/close	25C903
				Automatic, non-drip, quick-close	26C525
		Gear		Non-drip, quick-close	25C905
EM20		Flexible	1/2 (13)	High-flow, non-drip, quick-close	25C915
			3/4 (19)		25C918
		Rigid	1/2 (13)	High-flow, non-drip, quick-close	25C916
			3/4 (19)		25C919

		Inlet in (mm)	Part Number
EM8		1/2 (13)	25D433
EM20		1/2 (13)	25D436
		3/4 (19)	25D437

Oil | Gear Lube | ATF | Antifreeze

Ordering Information

Nozzle and Extension Kits

	Extension	Fluid	Nozzle Description	Part Number	Compatible Meters
	Rigid	Oil	Non-drip, manual open/close	26C267	EM8
			Automatic, non-drip, quick-close	255852	EM8
			Non-drip, quick-close	255921	EM20
	Rigid	Gear lube	Non-drip, quick-close	255854	EM8
	Flexible	Oil	Non-drip, manual open/close	26C268	EM8
			Automatic, non-drip, quick-close	255853	EM8
			Non-drip, quick-close	255859	EM20
	Nozzle Only	Oil/Antifreeze	Non-drip, manual open/close	17T207	EM8
	Nozzle Only	Oil/Antifreeze	Non-drip, quick-close	255793	EM20
	Nozzle Only	Gear lube	Non-drip, quick-close	255470	EM8
	Flexible	Oil/Antifreeze	Extension only, 2 ft length	131733	EM8

Hose Identification Wraps

Vinyl hose wrap for easy identification of meter fluid.

	Part Number	Description
	17S659	Red
	17S660	Blue
	17S661	Green
	17S662	Yellow
	17S663	White

Accessories

Part Number	Description
25D934	Electronic control replacement
129876	Black impact guard for EM8 or EM20
25D936	Battery kit: includes AAA batteries, Torx screws and bezel seal
100896	3/4 NPT(M) x 1/2 NPT(F) adapter

5-Year Warranty!

Heavy-Duty Preset Meters for the Toughest Jobs

Use Graco's PM8 and PM20 electronic preset meters to dispense fluids quickly, reliably and accurately to vehicles, trucks, yellow iron machines and more in the most challenging, extreme environments. Designed with high-quality robust materials to protect key components, these powerful meters can take a beating without fail for optimal productivity.

Proven in Harsh Conditions

Sealed electronics (IP69K) are protected against direct pressure washing and dust.

Long Battery Life

Features four easily-replaceable AA batteries.

High Flow Rates

Capable of up to 20 gpm (75.7 lpm).

Twist-Close Nozzle Prevents Leaking

Multiple extensions available including rigid, flexible and gear lube.

Long-Life Valve Design

Poppet design offers exceptional valve life for heavy-usage applications.

Easy Valve Operation

Ergonomic four-finger trigger for user comfort protected by a robust full-length trigger guard.

Durable Cast Body

Designed for heavy-duty and harsh applications.

Typical Applications

- Lube trucks
- Mining
- Heavy-duty dealerships
- Fleet service facilities
- Automotive dealerships
- Service and fast lube centers
- In-plant

Typical Fluids Handled

- Petroleum- and synthetic-based oils (motor, gear and ATF)
- Antifreeze/coolant

Technical Specifications	PM8	PM20
Flow Range	0.25 to 8 gpm (0.95 to 30.3 lpm)	0.25 to 20 gpm (0.95 to 75.7 lpm)
Maximum Operating Pressure	1,500 psi (102 bar)	
Unit of Measure	Quarts, gallons, pints, liters	
Accuracy/Repeatability	±0.5%	
Inlet	1/2 NPT	1/2 NPT or 3/4 NPT
Outlet	3/4 straight thread O-ring boss	
Maximum Dispense	19,999.9 units	
Maximum Preset Dispense	19,999 units	
Operating Temperature Range*	-20°F to 125°F (-29°C to 52°C)	
Storage Temperature Range	-40°F to 185°F (-40°C to 85°C)	
Outdoor Use	Yes – IP69k as per IEC 60529	
Battery	4 (AA) alkaline or 4 (AA) lithium	
Wetted Parts	Aluminum, stainless steel, carbon steel, acetal, nitrile rubber, Geolast™	
Meter Pressure Loss**	60 psi @ 6 gpm	150 psi @ 12 gpm
Dimensions	14.25 in L x 4.1 in W x 7.2 in H (36.2 cm L x 10.4 cm W x 18.3 cm H)	
Weight	5.2 lbs (2.4 kg)	
Warranty	Five years overall, three years electronics and 1 year wear parts	
Instruction Manual	3A8307	

*Lithium ion batteries are required if operating below 0°F (-18°C). **Tested in 10W oil at 70°F (21°C). Flow rate varies with fluid pressure, temperature, viscosity, inlet fitting size and nozzle type. Geolast is a registered trademark of Advanced Elastomer Systems.

Oil | Gear Lube | ATF | Antifreeze

Ordering Information

		Fluid	Extension	Flow Range gpm (lpm)	Inlet in (mm)	Part Number
PM8		Oil	Flexible	0.25-8 (1-30)	1/2 (13)	273157
		Antifreeze				25U086
		Oil	Rigid			273156
		Antifreeze				25U085
		Gear Lube	Rigid	0.25-5 (1-19)		273158
PM20		Oil	Flexible	0.25-20 (1-76)	1/2 (13)	273166
					3/4 (19)	273168
			Rigid		1/2 (13)	273165
					3/4 (19)	273167

Ordering Information

Nozzle and Extension Kits

	Extension	Fluid	Nozzle Description	Part Number	Compatible Meters
	Rigid	Oil	Non-drip, manual open/close	26C267	PM8
			Automatic, non-drip, quick-close	255852	PM8
			Non-drip, quick-close	255857	PM20
	Rigid	Gear lube	Non-drip, quick-close	255854	PM8
	Flexible	Oil	Non-drip, manual open/close	26C268	PM8
			Automatic, non-drip, quick-close	255853	PM8
			Non-drip, quick-close	255858	PM20
	Nozzle Only	Oil/Antifreeze	Non-drip, manual open/close	17T207	PM8
	Nozzle Only	Oil/Antifreeze	Non-drip, quick-close	255461	PM20
	Nozzle Only	Gear lube	Non-drip, quick-close	255470	PM8
	Flexible	Oil/Antifreeze	Extension only, 2 ft length	131733	PM8

Hose Identification Wraps

Vinyl hose wrap for easy identification of meter fluid.

	Part Number	Description
	17S659	Red
	17S660	Blue
	17S661	Green
	17S662	Yellow
	17S663	White

Accessories

Part Number	Description
18F169	Electronic control replacement
273181	Black impact guard for PM8 or PM20
25D906	Replacement inlet screen for oil/gear lube
25U000	Replacement inlet screen for antifreeze
18F174	Valve replacement for oil/gear lube
18F175	Valve replacement for antifreeze
18F170	Replacement gasket seals for electronics

Oil | Gear Lube | ATF | Antifreeze | Washer Fluid

Premium Quality and Performance with Ergonomic Design

Up to 18 gpm (68 lpm)

Graco's premium SD meters were designed from the ground up to provide the best user experience. These robust meters feature high flow, improved ergonomics and a large high-contrast LCD screen to make viewing dispense amounts easy in all lighting conditions.

Large LCD High-Contrast Display

High-contrast screen for reading in all lighting conditions with easy setup and navigation. See what fluid the meter is setup for and exactly how much you are dispensing.

Available in Two Models

Manual or preset options. Preset is compatible with Pulse™ FC and upgradeable to Pulse™ Pro.

High Flow

Available in two models – 8 gpm (30 lpm) or 18 gpm (68 lpm).

Durable Cast Body

Designed for heavy duty and harsh applications.

Automatic Quick-Close Nozzle

Choose from rigid or flexible extensions with non-drip performance.

Long-Life Valve Design

Cartridge design for fewer and easier repairs.

Ergonomic Handle Design

Four-finger trigger and easy-to-use button pad reduce worker fatigue.

Typical Applications

- Automotive dealerships
- Heavy-duty dealerships
- Fast lube centers
- Fleet service facilities
- Service shops
- In-plant
- Mining

Typical Fluids Handled

- Petroleum- and synthetic-based oils (motor gear, and ATF)
- Antifreeze
- Windshield wash

Technical Specifications

Flow Range*	0.25 gpm to 18 gpm (0.9 lpm to 68 lpm)
Maximum Working Pressure	1,500 psi (103.4 bar)
Units of Measure	Pints, quarts, gallons, liters (factory set to quarts)
Metered Dispense Valve Accuracy**	+/- 0.5%
Inlet	1/2 in–14 NPT or 3/4 in–14 NPT
Outlet	3/4 in–16 straight thread O-ring Boss
Maximum Recorded Dispense	9999 units (factory set in quarts)
Operating Temperature Range	4°F to 158°F (-20°C to 70°C)
Storage Temperature Range	-40°F to 158°F (-40°C to 70°C)
Battery Life***	6 months
Wetted Parts	Aluminum, stainless steel, PBT, nitrile rubber, zinc plated carbon steel, nickel plated carbon steel
Dimensions (without extension)	13 in L x 3.75 in W x 5.75 in H (33 cm x 9.5 cm x 14.6 cm)
Weight	5.3 lb (2.4 kg)
Warranty	Five years overall, three years electronics
Instruction Manual	3A6711 and 3A6673

*Tested in 10W motor oil. Flow rates vary with fluid pressure, temperature and viscosity.
**At 2.5 gpm (9.5 lpm), at 70°F (21°C), with 10-weight oil and 1 gallon dispensed. May require calibration.
***Battery required to meet life expectancy: Energizer® Alkaline E91.

Ordering Information

SD Electronic Meters

26C384

25M406

	Dispense Type	Flow Range gpm (lpm)	Fluid	Extension	Inlet in (NPT)	Part Number
SDP8	Preset (Pulse FC-enabled)	0.25–8 (1–30)	Oil	Rigid	1/2	26C384
				Flexible	1/2	26C354
			Antifreeze	Rigid	1/2	26C385
				Flexible	1/2	26C355
			Gear lube	Rigid	1/2	26C358
SDP18	Preset (Pulse FC-enabled)	0.25–18 (1–68)	Oil	Flexible	1/2	26C357
				Flexible	3/4	26C361
				Rigid	3/4	26C360
				Rigid	1/2	26C356
SDM8	Manual	0.25–8 (1–30)	Oil	Flexible	1/2	25M406
				Rigid	1/2	25M404
			Antifreeze	Flexible	1/2	25M407
				Rigid	1/2	25M405
			Gear Lube	Rigid	1/2	25M413
			Windshield Wash	Rigid	1/2	25M415
SDM18	Manual	0.25–18 (1–68)	Oil	Flexible	3/4	25M417
				Rigid	3/4	25M416
				Flexible	1/2	25M411
				Rigid	1/2	25M410

Nozzle and Extension Kits

	Extension	Fluid	Nozzle Description	Part Number	Compatible Meters
	Rigid	Oil	Automatic, non-drip, quick-close	255852	SDM8/SDP8
		Antifreeze	Non-drip, manual open/close	26C267	SDM8/SDP8
		Oil/Antifreeze	High-flow, non-drip, quick-close	255857	SDM18/SDP18
	Rigid	Gear lube	Non-drip, quick-close	255854	SDM8/SDP8
	Flexible	Oil	Automatic, non-drip, quick-close	255853	SDM8/SDP8
		Antifreeze	Non-drip, manual open/close	26C268	SDM8/SDP8
		Oil/Antifreeze	High-flow, non-drip, quick-close	255858	SDM18/SDP18
	Nozzle Only	Oil	Automatic, non-drip, quick-close	17R220	SDM8/SDP8
	Nozzle Only	Gear lube	Non-drip, quick-close	255470	SDM8/SDP8
	Nozzle Only	Oil/Antifreeze	Non-drip, manual open/close	17T207	SDM8/SDP8
	Flexible	Oil/Antifreeze	Extension only, 2 ft length	131733	SDM8/SDP8
	Rigid	Windshield wash	Extension, nozzle	273079	SDM8

Oil | Gear Lube | ATF | Antifreeze | Washer Fluid

Ordering Information

Filter Kits for SD Series Meters

	Part Number	Description
	255885	Kit includes filters/ strainers, spacers and O-rings

Impact Protection

	Part Number	Description
	131226	Pulse/SD meter boot

Swivel Covers

	Part Number	Description
	15T366	Black
	15T367	Red
	15T368	Blue
	15T369	Green
	15T370	Yellow

Hose Identification Wraps

Vinyl hose wrap for easy identification of meter fluid.

	Part Number	Description
	17S659	Red
	17S660	Blue
	17S661	Green
	17S662	Yellow
	17S663	White

High-Flow In-Line Meter

Graco's IM20 in-line meter is weather-rated and shock-resistant, protecting the electronics from intense, high-pressure cleaning and mechanical vibration common in industrial applications.

Up to 20 gpm (76 lpm)

Easy-to-Read LCD

Simple operator control. Measures in quarts, gallons, pints and liters.

Easy Battery Replacement

Long-lasting, replaceable AAA batteries.

Sealed Electronics

IP69K-rated meter. Electronics are safe from pressure washing and dusty environments.

Tracks Totals in Two Modes

Reset total for a periodic dispense history and non-reset total for the meter's total dispense history.

Typical Applications

- Automotive dealerships
- Service and fast lube centers
- Lube trucks
- Mining
- Heavy-duty dealerships
- Fleet service facilities
- In-plant

Typical Fluids Handled

- Petroleum- and synthetic-based oils (motor, gear and ATF)
- Antifreeze

Technical Specifications

Flow Range*	0.25 to 20 gpm (0.95 to 75.7 lpm)
Maximum Working Pressure	1,500 psi (102 bar)
Unit of Measure	Quarts, pints, gallons, liters (factory set to quarts)
Accuracy/Repeatability	±0.5%
Inlet/Outlet	3/4 NPT
Maximum Totalizer	19,999 units
Maximum Recorded Dispense	19,999 units
Operating Temperature Range	-22°F to 180°F (-30°C to 82°C)
Storage Temperature Range	-40°F to 185°F (-40°C to 85°C)
Outdoor Use	Yes – IP69k as per DIN 40050-9
Battery	2 (AAA) alkaline or (2) AAA lithium
Wetted Parts	Aluminum, stainless steel, carbon steel, acetal, nitrile rubber, Geolast™
Meter Pressure Loss*	35 psi @ 12 gpm
Dimensions	4.2 in L x 3.4 in W x 3.2 in H (10.7 cm L x 8. cm W x 8.1 cm H)
Weight	1 lb. 4 oz. (0.57 kg)
Warranty	Five years overall, three years electronics
Instruction Manual	3A5588

**Tested in 10W oil at 70°F (21°C). Flow rate varies with fluid pressure, temperature, viscosity, inlet fitting size and nozzle type.*
Geolast is a registered trademark of Advanced Elastomer Systems.

Ordering Information

Part Number	Description
25C841	IM20 high-flow, high-pressure in-line meter

Oil | Gear Lube | ATF | Antifreeze

Robust Electric In-Line Meter for Wired Indoor and Outdoor Applications

The IM20P wired electronic meter delivers precise in-line dispenses for in-plant, industrial and other applications. Its heavy-duty aluminum exterior and sealed electronics protect against corrosion inside or outside the plant. Designed and manufactured by a proven leader in meter technology, it's capable of flow rates up to 20 gpm (75.7 lpm) for optimal performance.

High Flow

Flow rates up to 20 gpm (75.7 lpm) for faster dispense.

Sealed Electronics

Meters are suitable for indoor or outdoor use. IP69K rated.

Rugged Aluminum Body

Remains corrosion free in harsh environments for years of trouble-free service.

Wired Convenience

Easily integrated with PLC (programmable logic controller).

Large Inlet and Outlet Porting

Minimal pressure drop to increase production.

Typical Applications

- Heavy-duty mobile service trucks
- Mining
- In-plant

Typical Fluids Handled

- Petroleum- and synthetic-based oils (motor, gear and ATF)
- Antifreeze/coolant

Ordering Information

Part Number	Description
133480	IM20P high-flow, high-pressure in-line pulser meter

Technical Specifications

Flow Range*	0.25 gpm to 20 gpm (0.95 lpm to 75.7 lpm)
Maximum Working Pressure	1,500 psi (10 MPa, 102 bar)
Units of Measure	User-defined based on pulse output
Accuracy	+/- 0.5%
Inlet/Outlet	3/4 in NPT
Operating Temperature Range	-22°F to 180°F (-30°C to 82°C)
Storage Temperature Range	-40°F to 185°F (-40°C to 85°C)
Outdoor Use	Yes – IP69K as per DIN 40050-9
Operating Voltage	12–24 VDC
Operating Current	26–51 mA
Wire Connection	2-wire (18 ga) PNP or NPN
Wetted Parts	Aluminum, acetal, nitrile, rubber
Meter Pressure Loss*	35 psi (2.41 bar) @ 12 gpm (45.4 lpm)
Dimensions	5.8 in L x 3.4 in W x 2.9 in H (14.7 cm L x 8.6 cm W x 7.4 cm H)
Weight	1.3 lb (0.59 kg)
Warranty	One year
Instruction Manual	3A8625

*Tested in 10W oil at 70°F. Flow rate varies with fluid pressure, temperature, viscosity, inlet fitting size and nozzle type.

SDI15 In-Line Electronic Meter

Up to 15 gpm (57 lpm)

Energy Efficient

Powered by two AA alkaline batteries.

Tracks Totals in Two Modes

Reset total for a periodic dispense history and non-reset total for the meter's total dispense history.

Rugged Stainless Steel Body

Remains corrosion free in hard environments for years of trouble-free service.

Large, Easy-to-Read LCD

Simple operator controls and measures in pints, quarts, liters or gallons.

Typical Applications

- Automotive dealerships
- Fast lube centers
- Service shops
- Heavy-duty dealerships
- Fleet services facilities
- In-plant
- Mining

Typical Fluids Handled

- Petroleum- and synthetic-based oils (motor, gear and ATF)
- Antifreeze
- Windshield washer fluid
- Diesel exhaust fluid

Technical Specifications

Flow Range*	0.5 gpm to 15 gpm (1.9 lpm to 57 lpm)
Maximum Working Pressure	1,500 psi (103 bar)
Units of Measure	Quarts, pints, gallons, liters (factory-set to quarts)
Accuracy	± 0.5%
Inlet/Outlet	1/2 NPT
Maximum Totalizer	99,999
Maximum Recorded Dispense	999.99
Operating Temperature Range	-4°F to 122°F (-20°C to 50°C)
Storage Temperature Range	-13°F to 122°F (-25°C to 50°C)
Outdoor Use	No
Battery	2AA alkaline
Wetted Parts	Nitrile rubber, SST and Geolast
Meter Pressure Loss*	22 psi (1.5 bar) @ 14 gpm (53 lpm)
Dimensions	5 in L x 3 in W x 2.75 in H (12.7 cm L x 7.6 cm W x 7 cm H)
Weight	1.8 lb (0.8 kg)
Warranty	Seven years overall, three years electronics
Instruction Manual	313048

*Tested in 10W oil at 70°F. Flow rates vary with fluid pressure, temperature and viscosity.

Ordering Information

Meters

Part Number	Description
247453	SDI15 medium/high pressure – medium-/high-flow in-line meter for petroleum- and synthetic-based oils, antifreeze and windshield washer fluid
24G738	SDI15 medium/high pressure – medium-/high-flow in-line meter for diesel exhaust fluid applications (BSPP)

Accessories

	Part Number	Description
	108458	Shutoff ball valve 1/2 NPT(F)
	223179	Strainer kit 1/2 NPT(F) 1/2 NPT(M)

Oil | Gear Lube | ATF | Antifreeze

Accurate Dispensing for a Wide Variety of Vehicle or Machine Service Applications

Ideal for indoor or outdoor use in all size shops.

Up to 8 gpm (30.2 lpm)

Impact-Resistant Shroud

Resists scratches and protects knob and dial from damage.

Simple, Easy Design

Dial and face design is easy to read and set.

Fluid Swivel

1/2 inch fluid inlet.

Fluid Extension Kits

Choose from rigid or flexible with automatic thermal compensating nozzle.

Built-In Totalizer

Helps manage material usage.

Durable Cast Housing

Durable aluminum body is balanced and lightweight with comfortable grip.

Typical Applications

- Automotive dealerships
- Fast lube centers
- Service shops
- Heavy-duty dealerships
- Fleet services facilities
- In-plant
- Lube trucks
- Mining

Typical Fluids Handled

- Petroleum- and synthetic-based oils (motor, gear and ATF)
- Antifreeze

Technical Specifications

Flow Range*	0.28 gpm (1.0 lpm) to 8 gpm (30.2 lpm)
Maximum Working Pressure	1,500 psi (103 bar)
Units of Measure	Quarts, gallons, liters
Accuracy	± 1%
Inlet	1/2 in NPT
Outlet	3/4-16 straight thread O-ring boss
Maximum Totalizer	99,999 units
Maximum Recorded Dispense	60 gallons
Operating Temperature Range	-50°F to 160°F (-45°C to 70°C)
Outdoor Use	Yes
Wetted Parts	Brass, aluminum, SST, TPE
Meter Pressure Loss*	30 psi (2.1 bar) @ 4 gpm (15 lpm)
Dimensions	11.5 in L x 5 in W x 6.3 in H (29.2 cm L x 12.7 cm W x 16 cm H)
Weight	3.5 lb (1.6 kg)
Warranty	Five years
Instruction Manual	333492

**Tested with 10W motor oil. Minimum/maximum flow rates will vary with fluid viscosity.*

Ordering Information

Manual Meters

Extension	Model Description	Part Number
Bare	4/16 Liter	24U956
	4/16 Quart	24U959

Manual Meter Packages

	Extension	Model Description	Part Number	Replacement Nozzle/Extension Kit
	Flexible	4/16 Liter	24V043	255853
		4/16 Quart	24V034	255853
	Rigid	4/16 Liter	24V046	255852
		4/16 Quart	24V037	255852
	Gear Lube	4/16 Liter	24V049	255854
		4/16 Quart	24V040	255854

Preset Meters

Extension	Model Description	Part Number
Bare	60 Gallon	24U950
	60 Liter	24U953
	60 Quart	24U947

Oil | Gear Lube | ATF | Antifreeze

Ordering Information

Preset Meter Packages

	Extension	Model Description	Part Number	Package Includes Nozzle Extension
	Flexible	60 Gallon	24Z129	255853
		60 Liter	24Z132	255853
		60 Quart	24Z126	255853
	Rigid	60 Gallon	24Z128	255852
		60 Liter	24Z131	255852
		60 Quart	24Z125	255852
	Short Rigid	60 Gallon	24V055	24W641
		60 Liter	24V058	24W641
		60 Quart	24V052	24W641
	Gear Lube	60 Gallon	24Z130	255854
		60 Liter	24Z133	255854
		60 Quart	24Z127	255854

Nozzle Extensions

	Fluid	Extension	Compatible Meter	Part Number
	Oil	Flexible	Manual	255853
		Rigid	Manual	255852
		Short Rigid	Preset	24W641
	Antifreeze	Flexible	Manual/Preset	24W306
		Rigid	Manual/Preset	255855
	Oil/Antifreeze	Flexible (extension only – 2 ft)	Manual/Preset	131733
	Gear lube	Rigid	Manual	255854

Accessories

	Part Number	Description
	256164	Strainer filter kit, 10-pack

SDV15 Control Valve

Up to 15 gpm (76 lpm)

For Standard and Heavier-Duty Applications

Designed to perform in larger dealerships, fleet maintenance shops, municipal garages and higher-volume in-plant applications with longer plumbing runs and larger fluid usage.

Fluid Extension Kits

Choose from rigid or flexible extensions.

Lock-On/Lock-Off Trigger

For hands-free operation.

Sturdy Cast Body

Designed for use in tough environments.

Fluid Swivel

1/2 inch fluid inlet.

Typical Applications

- Automotive dealerships
- Fast lube centers
- Service shops
- Lube trucks
- Heavy-duty dealerships
- Fleet services facilities
- In-plant
- Lube trucks
- Mining

Typical Fluids Handled

- Petroleum- and synthetic-based oils (motor, gear and ATF)
- Antifreeze

Technical Specifications

Flow Range*	15 gpm (56.8 lpm)
Maximum Working Pressure	1,500 psi (103 bar)
Inlet	1/2 in NPT
Outlet	3/4-16 straight thread O-ring boss
Operating Temperature Range	-40°F to 180°F (-40°C to 82°C)
Outdoor Use	Yes
Wetted Parts	Aluminum, SST, CS, acetal, nitrile rubber, tpe
Dimensions	12 in L x 8.4 in W x 2.4 in H (30.5 cm L x 21.3 cm W x 6.1 cm H)
Weight	0.4 lb (0.18 kg)
Warranty	Seven years
Instruction Manual	312789

*Tested in 10W oil at 70°F. Flow rates vary with fluid pressure, temperature, viscosity, inlet fitting and nozzle type.

Oil | Gear Lube | ATF | Antifreeze

Ordering Information

SDV15 Control Valve

	Fluid	Extension	Inlet in (mm)	Part Number
	Oil	Rigid	1/2 (13)	247712
		Flexible		247713
	Antifreeze	Rigid		247715
		Flexible		247716
	Gear	Gear		247714

SDV15 Bare Control Valve

	Inlet in (mm)	Part Number
	1/2 (13)	247717

High Flow Nozzles with Extension

	Extension	Part Number
	Rigid	255857
	Flexible	255858

Filter Kit

	Description	Part Number
	Strainer filter kit	256164

Quick Close Nozzle

Extension sold separately.

	Fluid	Part Number
	Oil	17R220
	Antifreeze	255460
	Gear lube	255470
	Oil/Antifreeze (high-flow)	255461

For Standard and Heavier-Duty Applications

Designed to perform in larger dealerships, fleet maintenance shops, municipal garages and higher-volume in-plant applications with longer plumbing runs and larger fluid usage.

Fluid Extension Kits

Choose from rigid or flexible extensions with automatic flush-mount nozzle design that re-seats after each dispense to prevent dirt contamination.

Lock-On/Lock-Off Trigger

For hands-free operation.

Sturdy Cast Body

Designed for use in tough environments.

1/2 and 3/4 Inch Inlet with Swivel Options

Meets standard and high flow requirements.

Typical Applications

- High-flow, non-metered oil dispense
- Automotive dealerships
- Heavy-duty dealerships
- Fast lube centers
- Fleet service facilities
- In-plant
- Lube trucks
- Mining

Typical Fluids Handled

- Petroleum- and synthetic-based oils (motor, gear and ATF)
- Antifreeze

Technical Specifications

Flow Range*	Up to 20 gpm (75.7 lpm)
Maximum Working Pressure	1,500 psi (103 bar)
Inlet	1/2 in or 3/4 in NPT
Outlet	7/8-14 straight thread O-ring boss
Operating Temperature Range	-40°F to 180°F (-40°C to 82°C)
Outdoor Use	Yes
Wetted Parts	Aluminum, SST, CS, acetal, nitrile rubber, Geolast
Dimensions	12 in L x 8.4 in W x 2.4 in H (30.5 cm L x 21.3 cm W x 6.1 cm H)
Weight	0.4 lb (0.18 kg)
Warranty	Seven years
Instruction Manual	308642

*Tested in 10W oil at 70°F. Flow rates vary with fluid pressure, temperature, viscosity, inlet fitting and nozzle type.

Oil | Gear Lube | ATF | Antifreeze

Ordering Information

XDV20 Control Valve

Includes high flow, quick-close nozzle.

	Extension	Inlet in (mm)	Part Number
	Rigid	1/2 (13)	247718
		3/4 (19)	247722
	Flexible	1/2 (13)	247721
		3/4 (19)	247723

XDV20 Bare Control Valve

	Inlet in (mm)	Part Number
	1/2 (13)	247724
	3/4 (19)	247725

Accessories

	Part Number	Description
	255793	Quick-close high-flow nozzle for oil, ATF and antifreeze
	255859	Flexible extension with quick-close nozzle (255793)
	255921	Rigid extension with quick-close nozzle (255793)

Ordering Information

Lubricant Dispense Consoles

Includes upper and lower plates with roller guides and brackets. Hoses not included.

	Part Number	Description	Package Includes	
			Dispense Valve Brackets (qty)	Water Bib Brackets (qty)
	222629	Six-station console	196471 (5)	110236 (1)
	223448	Four-station console	196471 (3)	110236 (1)
	222645	Single add-on fluid module	196471 (1)	–

Lubricant Dispense Consoles Accessories

	Part Number	Description
	110236	Water bib bracket
	110237	Dispense valve bracket for XD meters
	110285	Pistol-grip dispense valve bracket
	196471	Dispense valve bracket for LDP5, EM8 and EM20 meters
	249440	Dispense valve bracket for SD/Matrix meters

Ordering Information

Oil Dispense Bar

	Part Number	Description
	220107	Modular oil dispense bar supports up to 3 dispense taps (1 included) and optional meters. Add up to two additional dispense valves with tap kit 220112.

Accessories for Oil Dispense Bar

	Part Number	Description
	220112	Dispenser valve kit for adding dispense valves to modular oil dispense bar.
	239706	Meter kit for adding IM5 electronic totalizing meter to dispense valve. Reads in gallons, quarts, pints and liters.

GREASE PUMPS

Page

Grease Pump Selection Guide 114-115
LD Series™ Grease Pumps. 116-120
LD Series™ Grease Pump Accessories . . 121-122
Mini Fire-Ball® 225 Grease Pumps 123-126
Fire-Ball® 300 Grease Pumps 127-134
Fire-Ball® 425 Grease Pumps 135-141
Grease Pump Accessories 142-145
GT 750 36:1 Grease Pumps. 146-147
NXT™ Check-Mate® Grease Pumps 148-152
Dyna-Star® Hydraulic Grease Pumps . . . 153-154
Viscount® II Grease Pumps 155-156
Manually-Operated Grease Pumps. 157

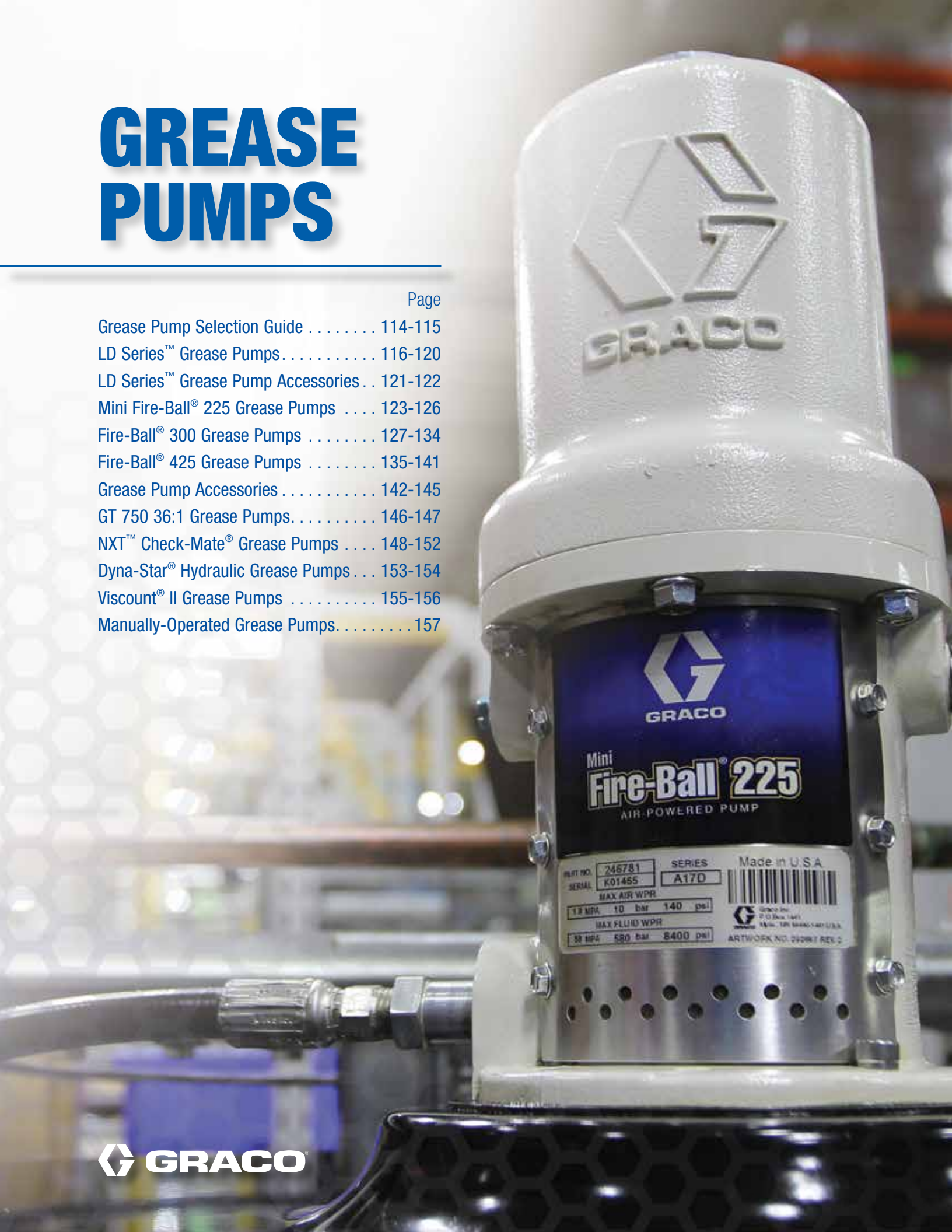

GRACO

Grease Pump Selection Guide

Pump Family and Fluid Pressure Ratio	Typical Applications	Annual Usage	Line Length	Simultaneous Dispense Points	Approx. Free Flow Rate @ 100 psi	Air Inlet	Fluid Outlet	Air Operation Range	Reference Page
LD, 50:1	• Automotive dealerships • Fast lube centers • Lube trucks • Lubricant transfer • Service shops	Up to 7,000 lbs (3,175 kg)	Up to 100 (30.5 m)	1	4.5 lbs/min (2 kg/min)	1/4 in NPT(F)	1/4 in NPT(F)	20-150 psi (1.37-10.3 bar)	116-122
Mini Fire-Ball 225, 50:1	• Automotive dealerships • Fast lube centers • Fleet service facilities • Heavy-duty dealerships • In-plant • Lube trucks • Lubricant transfer • Mining • Service shops	Up to 10,000 lbs (4,535 kg)	Up to 100 (30.5 m)	1	1.5 lbs/min (0.7 kg/min)	3/8 in NPT(F)	1/4 in NPT(F)	40-140 psi (2.8-10 bar)	123-126 141-144
Fire-Ball 300, 15:1	• Automotive dealerships • Fast lube centers • Fleet service facilities • Heavy-duty dealerships • In-plant • Lube trucks • Lubricant transfer • Mining • Service shops	Up to 10,000 lbs (4,535 kg)	Up to 250 ft (76 m)	1-2	7.5 lbs/min (3.4 kg/min)	3/8 in NPT(F)	1/4 in NPT(F)	40-180 psi (2.8-12.5 bar)	127-129 141-144
Fire-Ball 300, 50:1	• Automotive dealerships • Fast lube centers • Fleet service facilities • Heavy-duty dealerships • In-plant • Lube trucks • Lubricant transfer • Mining • Service shops	Up to 10,000 lbs (4,535 kg)	Up to 250 ft (76 m)	1-2	7.5 lbs/min (3.4 kg/min)	3/8 in NPT(F)	1/4 in NPT(F)	30-140 psi (2.1-9.7 bar)	127-138 130-134 141-144
Fireball 425, 10:1	• Automotive dealerships • Fast lube centers • Fleet service facilities • Heavy-duty dealerships • In-plant • Lube trucks • Lubricant transfer • Mining • Service shops	> 20,000 lbs (9,072 kg)	Up to 500 ft (152 m)	4 or more	29 lbs/min (13.1 kg/min)	1/2 in NPT(F)	1 in NPT(F)	40-180 psi (2.8-12.5 bar)	135-136 142-144
Fire-Ball 425, 50:1	• Automotive dealerships • Fast lube centers • Fleet service facilities • Heavy-duty dealerships • In-plant • Lube trucks • Lubricant transfer • Mining • Service shops	> 20,000 lbs (9,072 kg)	Up to 250 ft (76 m)	4 or more	9 lbs/min (4.1 kg/min)	1/2 in NPT(F)	3/8 in NPT(F)	40-150 psi (2.8-10.3 bar)	135-137 139-145
Fire-Ball 425, 75:1	• Automotive dealerships • Fast lube centers • Fleet service facilities • Heavy-duty dealerships • In-plant • Lube trucks • Lubricant transfer • Mining • Service shops	> 20,000 lbs (9,072 kg)	Up to 500 ft (152 m)	4 or more	6.5 lbs/min (2.9 kg/min)	1/2 in NPT(F)	3/8 in NPT(F)	40-100 psi (2.8-7 bar)	134-136 138-145
GT 750, 36:1 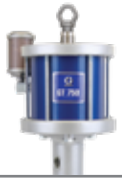	• Fleet service facilities • Heavy-duty dealerships • In-plant • Lube trucks • Mining	> 20,000 lbs (9,072 kg)	Up to 250 ft (76 m)	4 or more	32 lbs/min (14.5 kg/min)	1/2 in NPT(F)	1 in NPT(F)	40-100 psi (2.8-7 bar)	146-147

Pump Family and Fluid Pressure Ratio	Typical Applications	Annual Usage	Air Inlet	Fluid Outlet	Air Operation Range	Reference Page
Check-Mate 14:1	• Fleet service facilities • In-plant large runs • Large volume lubricant transfer • Mining remote fill	> 20,000 lbs (9,072 kg)	3/4 in NPT(F)	1-1/2 in NPT(M)	0-100 psi (0-7 bar)	148-149 151-152
Check-Mate 26:1	• Fleet service facilities • In-plant large runs • Large volume lubricant transfer • Mining remote fill	> 20,000 lbs (9,072 kg)	3/4 NPT(F)	1-1/2 in NPT(M)	0-100 psi (0-7 bar)	148-149 152
Check-Mate 29:1	• Fleet service facilities • In-plant large runs • Large volume lubricant transfer • Mining remote fill	> 20,000 lbs (9,072 kg)	3/4 NPT(F)	1 in NPT(F)	0-100 psi (0-7 bar)	148-149 152
Check-Mate 55:1	• Fleet service facilities • In-plant large runs • Large volume lubricant transfer • Mining remote fill	> 20,000 lbs (9,072 kg)	3/4 NPT(F)	1 in NPT(F)	0-100 psi (0-7 bar)	148 150-152
Check-Mate 63:1	• Fleet service facilities • In-plant large runs • Large volume lubricant transfer • Mining remote fill	> 20,000 lbs (9,072 kg)	3/4 NPT(F)	3/4 in NPT(M)	0-72 psi (0-4.9 bar)	148 150-152
Check-Mate 68:1	• Fleet service facilities • In-plant large runs • Large volume lubricant transfer • Mining remote fill	> 20,000 lbs (9,072 kg)	3/4 NPT(F)	1 in NPT(F)	0-78 psi (0-5.4 bar)	148 150-152

Pump Family and Fluid Pressure Ratio	Typical Applications	Maximum Grease Output Flow Rate	Maximum Grease Output Pressure	Hydraulic Inlet (Supply)	Hydraulic Outlet (Return)	Grease Outlet	Maximum Hydraulic Inlet Pressure	Reference Page
Dyna-Star 5:1	• Fleet service facilities • Heavy-duty dealerships • In-plant • Lube trucks • Lubricant transfer • Mining • Service shops	4 lb/min (1.8 kg/min)	7,500 psi (517 bar)	3/8 in NPT(F)	3/4 in NPT(F)	1/2 in NPT(F)	1,500 psi (102 bar)	153-154
Dyna-Star 10:1	• Fleet service facilities • Heavy-duty dealerships • In-plant • Lube trucks • Lubricant transfer • Mining • Service shops	1.1 lb/min (0.5 kg/min)	7,500 psi (517 bar)	3/4 in -16 JIC (37° Flare)	3/4 in NPT(F)	1/2 in NPT(F)	600 psi (41 bar)	153-154
Viscount II 2.4:1	• Fleet service facilities • Heavy-duty dealerships • In-plant • Lube trucks • Lubricant transfer • Mining • Service shops	54 lb/min (20.4 kg/min)	2,300 psi (159 bar)	3/4 in NPT(F)	1 in NPT(F)	1-1/2 in NPT(F)	1,500 psi (102 bar)	155-156

LD Series™ 50:1 Grease Pumps

Grease

5 Year Warranty!

Durable and hardworking

Stay ahead of the competition with LD Series pumps. These affordable and full-featured pumps are designed for lower-volume (up to 7,000 lb/year) applications. LD pumps are fine-tuned for a compact, flexible and durable solution.

Three-Inch Air Motor

Provides more power to create better flow.

Engineered for Durability

Patented cup and plate design eliminates the need for O-rings that wear out faster, for a more durable, longer-lasting solution.

Modular Air Valve

Air inlet and exhaust locations are easy to configure with just four bolts for simple, hassle-free installations.

Pilot Valves

Patented self- cleaning design increases reliability in dirty air environments and minimizes pressure drop with rapid changeovers for reduced stalling and smoother flow.

Typical Applications

- Automotive dealerships
- Fast lube centers
- Service shops
- Lube trucks

Typical Fluids Handled

- Grease up to NLGI #2

Pump Performance

LD Series 50:1 Pumps

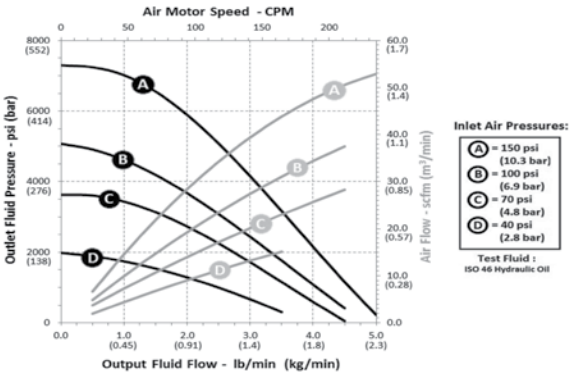

Technical Specifications

Fluid Pressure Ratio	50:1
Air Motor Effective Diameter	3 in (76.2 mm)
Annual Usage	Up to 7,000 lb (3,175 kg)
Maximum Fluid Working Pressure	7,500 psi (517 bar / 51.7 MPa)
Approximate Free Flow Rate @ 100 psi	4.5 lb/min (2 kg/min)
Output per Cycle	0.34 oz (9.7 g)
Approximate Air Use and Flow @ 100 psi (80 cpm)	16 @ 1.7 lb/min (0.45 @ 0.77 kg/min)
Air Inlet	1/4 in NPT(F)
Fluid Outlet	1/4 in NPT(F)
Air Operation Range	20 psi to 150 psi (1.37 bar to 10.3 bar)
Max Recommended Pump Speed	120 cpm
Cycles per Pound (Kg)	47 cpp (103 cpk)
Wetted Parts	Steel, brass, nitrile rubber, polyurethane, UHMWPE, acetal
Sound Pressure Level	72.9 dB(A)
Sound Power Level	82 dB(A)
Approximate Weight	35 lb drum – 11.2 lb (5.1 kg) 120 lb drum – 15.0 lb (6.8 kg) 400 lb drum – 17.0 lb (7.7 kg)
Instruction Manual	3A1334

Ordering Information

LD Series 50:1 Pumps

Part Number	Description
24G600	For 35 lb (16 kg) pail
24G603	For 120 lb (55 kg) drum
24G606	For 400 lb (180 kg) drum

Ordering Information

35 lb Grease Packages

Package Number	24J030	26C169	25C549
Ratio	50:1	50:1	50:1
Type of Package	Stationary	Stationary	Mobile
Container Size	35 lb (16 kg)	35 lb (16 kg)	35 lb (16 kg)
Pump Part Number	24G600	24G600	24G600
Hose Kit	24H862	–	24H862
Hose Sizes	Grease 1/4 in ID x 6 ft (1.8 m) Air/Water 3/8 in ID x 6 ft (1.8 m)	Grease – Whip 1/8 in x 1/8 in x 30 in (0.8 m) Grease 1/4 in x 3/8 in x 20 ft (6.1 m)	Grease 1/4 in ID x 6 ft (1.8 m) Air/Water 3/8 in ID x 6 ft (1.8 m)
Follower Plate	24F901	24F901	24F901
Drum Cover	24F904	24F904	24F904
Grease Valve	129581	129581	129581
Z-Swivel	129591	129591	129591
Fitting(s)	–	157705	–
Air Regulator	–	24H420	–
Air Filter	–	106148	–
Portable Base	–	–	131183
Instruction Manual	3A1335	3A1335	3A1335

Ordering Information

120 lb Grease Packages

		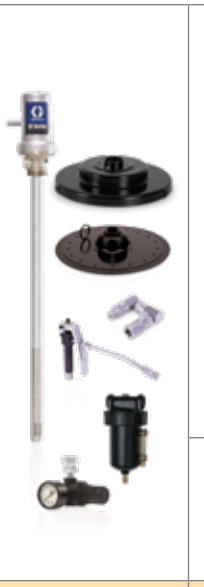				
Package Number	24J036	26C170	25C548	24J048	24J060	25N618
Ratio	50:1	50:1	50:1	50:1	50:1	50:1
Type of Package	Stationary	Stationary	Mobile	Mobile	Mobile	Mobile
Container Size	120 lb (54 kg)	120 lb (54 kg)	120 lb (54 kg)	120 lb (54 kg)	120 lb (54 kg)	120 lb (54 kg)
Pump Part Number	24G603	24G603	24G603	24G603	24G603	24G603
Hose Kit	24H862	–	24H862	24H862	24J501	–
Hose Sizes	Grease 1/4 in ID x 6 ft (1.8 m) Air/Water 3/8 in ID x 6 ft (1.8 m)	Grease – Whip 1/8 in x 1/8 in x 30 in (0.8 m) Grease 1/4 in x 3/8 in x 20 ft (6.1 m)	Grease 1/4 in ID x 6 ft (1.8 m) Air/Water 3/8 in ID x 6 ft (1.8 m)	Grease 1/4 in ID x 6 ft (1.8 m) Air/Water 3/8 in ID x 6 ft (1.8 m)	Grease 1/4 in ID x 6 ft (1.8 m) Air/Water 3/8 in ID x 6 ft (1.8 m)	Grease 1/4 in ID x 12 ft (3.7 m)
Follower Plate	24F902	24F902	24F902	24F902	24F902	24F902
Drum Cover	24F905	24F905	24F905	24F905	24F905	24F905
Grease Valve	129581	129581	129581	129581	129581	129581
Z-Swivel	129591	129591	129591	129591	129591	129591
Fitting(s)	–	157705	–	–	–	165198 / 169970
Air Regulator	–	24H420	–	–	–	24H420
Air Filter	–	106148	–	–	–	–
Portable Base	–	–	131184	24H422	24H422	131184
Hose Reel	–	–	–	–	LD	–
Hose Size	–	–	–	–	1/4 in x 35 ft	–
Hose Reel Part Number	–	–	–	–	24H663	–
Instruction Manual	3A1335	3A1335	3A1335	3A1335	3A1335	3A1335

LD Series 50:1 Grease Pump Packages

Ordering Information

400 lb Grease Packages

Package Number	24J042	26C171	24J054	24J066
Ratio	50:1	50:1	50:1	50:1
Type of Package	Stationary	Stationary	Mobile	Mobile
Container Size	400 lb (180 kg)	400 lb (180 kg)	400 lb (180 kg)	400 lb (180 kg)
Pump Part Number	24G606	24G606	24G606	24G606
Hose Kit	24H862	–	24H862	24J501
Hose Sizes	Grease 1/4 in ID x 6 ft (1.8 m) Air/Water 3/8 in ID x 6 ft (1.8 m)	Grease – Whip 1/8 in x 1/8 in x 30 in (0.8 m) Grease 1/4 in x 3/8 in x 20 ft (6.1 m)	Grease 1/4 in ID x 6 ft (1.8 m) Air/Water 3/8 in ID x 6 ft (1.8 m)	Grease 1/4 in ID x 6 ft (1.8 m) Air/Water 3/8 in ID x 6 ft (1.8 m)
Follower Plate	24F903	24F902	24F903	24F903
Drum Cover	24F906	24F905	24F906	24F906
Grease Valve	129581	129581	129581	129581
Z-Swivel	129591	129591	129591	129591
Fitting(s)	–	157705	–	–
Air Regulator	–	24H420	–	–
Air Filter	–	106148	–	–
Type of Reel	–	–	–	LDX
Reel Size	–	–	–	3/8 in x 50 ft
Reel Part Number	–	–	–	HEH006
Portable Base	–	–	24F915	24F915
Instruction Manual	3A1335	3A1335	3A1335	3A1335

LD Pro-Shot™ Non-Metered Grease Valves

- Rugged design for harsh environments
- Pressure-assisted trigger for ease of operation
- Easy adjustment with top locking nut
- 6 in steel extension with heavy-duty coupler

Technical Specifications

Pressure	7,500 psi (517 bar / 51.7 MPa)
Wetted Parts	Steel, nitrile rubber, PTFE
Inlet Size	1/4 in

Ordering Information

Part Number	Description
129581	LD Pro Shot Grease Valve, 1/4 in NPT

LD Z-Swivel

- Swivels to prevent twist damage to hoses
- Constructed of heavy-duty steel and ball bearings for smooth and unrestricted movement

Technical Specifications

Pressure	6,000 psi (413 bar / 41.3 MPa)
Inlet Size	1/4 in

Ordering Information

Part Number	Description
129591	Z-swivel, 1/4 in NPT

Ordering Information

Adjustable Bung Adapter

	Part Number	Description
	24P623	Adjustable bung adapter for LD pumps

Air Regulators

	Part Number	Description
	24H420	Mini air pressure regulator with gauge, 1/4 in NPT x 3/8 in NPT, self-relieving
	133215	Mini air filter-regulator with gauge, 1/4 in NPT, self-relieving, semi-auto drain

Carts

	Part Number	Description
	24H422	Drum cart with pneumatic wheels for 120 lb drums; includes chain for securing drum to cart
	24F915	Drum cart with pneumatic wheels for 400 lb drums; includes chain for securing drum to cart

Drum Covers

	Part Number	Description
	24F904	Cover for 35 lb (16 kg) pails
	24F905	Cover for open-head 120 lb (54 kg) drums
	24F906	Cover for open-head 400 lb (182 kg) drums

LD Drum Dollies

	Part Number	Description
	131183	Drum Dolly, 35 lb (16 kg)
	131184	Drum Dolly, 120 lb (54 kg)
	129645	Drum Dolly, 400 lb (182 kg)

Follower Plates

	Part Number	Description
	24F901	Follower plate for 35 lb (16 kg) pails
	24F902	Follower plate for 120 lb (54 kg) drums
	24F903	Follower plate for 400 lb (182 kg) drums

Hose and Fitting Kits

	Part Number	Description	Includes				
			Grease Hose	Grease Hose Size	Air Hose	Air Hose Size	Fitting
	24H862	6 ft LD grease pump hose kit	24H606	1/4 in NPT(M) x 1/4 in NPT(M) x 6 ft	24H858	3/8 in x 6 ft	156823
	24J501	6 ft LD grease pump hose kit	24J487	1/4 in NPT(M) x 1/4 in NPT(M) (with 90º swivel) x 6 ft	24H858	3/8 in x 6 ft	156823

7 Year Warranty!

Perfect for Medium Pressure, Low Volume Applications

You can't afford downtime, especially when your shop is small. The Mini Fire-Ball 225 is designed with fewer moving parts, which means less wear and tear and reduced downtime, allowing you to run a more profitable business.

Durable Casting

Thick cast aluminum air motor housing offers unmatched durability.

Fewer Repairs

Fewer moving parts in the air motor assembly means less downtime and low repair cost.

Extended Seal Life

In-line pump design aligns the air motor piston and fluid piston rods to maximize seal life.

Superior Sealing

Non-metallic poppet valves offer positive sealing performance, even with contaminated "dirty" air environments for long-life without repair.

Corrosion-Resistant

Corrosion-resistant design utilizes liquid salt nitriding, nickel plating, stainless steel, aluminum and chrome on key components for longer life.

Typical Applications

- Automotive dealerships
- Fast lube centers
- Service shops
- Heavy-duty dealerships
- Fleet services facilities
- In-plant
- Lube trucks
- Mining

Typical Fluids Handled

- Grease up to NLGI #2

Pump Performance

Mini Fire-Ball 225 Pumps

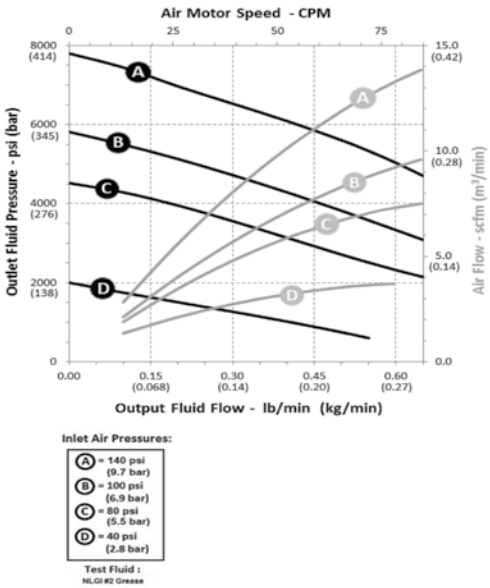

Mini Fire-Ball® 225 Grease Pumps

Technical Specifications	
Fluid Pressure Ratio	50:1
Air Motor Effective Diameter	2.25 in (57.2 mm)
Annual Usage	Up to 10,000 lb (4,535 kg)
Maximum Fluid Working Pressure	8,400 psi (578 bar / 57.8 MPa)
Approximate Free Flow Rate @ 100 psi	1.5 lb/min (0.7 kg/min)
Output per Cycle	0.12 oz (3.5 g)
Continuous Duty Flow Rate	0.32 lb/min (0.15 kg/min)
Approximate Air Use and Flow @ 100 psi (80 cpm)	9.3 @ 0.62 lb/min (0.26 @ 0.28 kg/min)
Air Inlet	3/8 in NPT(F)
Fluid Outlet	1/4 in NPT(F)
Air Operation Range	40 psi to 140 psi (3 bar to 10 bar)
Max Recommended Pump Speed	100 cpm
Cycles per Pound (Kg)	130 cpp (287 cpk)
Wetted Parts	Carbon steel, zinc plating, brass, polyurethane, ultra-high molecular weight polyethylene, Buna-N
Sound Pressure Level	77.8 dB(A)
Sound Power Level	85.6 dB(A)
Approximate Weight	15 lb (6.8 kg)
Instruction Manual	309966

Ordering Information

Mini Fire-Ball 50:1 Pumps

Part Number	Description
246909	For 35 lb (16 kg) pail
253361	For 35 lb (16 kg) pail, without handle
246780	For 120 lb (55 kg) drum
246781	For 400 lb (180 kg) drum

Ordering Information

35 lb and 50 lb Grease Packages

Package Number		246910*	246911*	246913*
Ratio		50:1	50:1	50:1
Type of Package		Portable pail dispenser	Stationary pail dispenser	Cart-mounted pail dispenser
Container Size		35 lb to 50 lb (16 kg to 23 kg)	35 lb to 50 lb (16 kg to 23 kg)	35 lb to 50 lb (16 kg to 23 kg)
Container		–	204134	204134
Pump Part Number		246909	246909	246909
Fluid Hose Size		1/4 in x 12 ft	1/4 in x 12 ft	1/4 in x 12 ft
Dispense Hose Kit		236058	236058	236058
Dispense Kit Includes	12 ft Hose	109151	109151	109151
	Air Coupler	114558	114558	114558
	Air Fitting	169971	169971	169971
	Z-Swivel	202577	202577	202577
	Pro-Shot Valve	242056	242056	242056
Follower Plate		24F901	**	**
Drum Cover		222059	24R350	24R350
Portable Base		–	–	203650
Instruction Manual		309967	309967	309967

*Use 3/8 in (9.5 mm) air regulator (109075); must be ordered separately.
**Order follower plate (220653) separately for 35 lb (16 kg) pails or (220654) for 70 lb (32 kg) bulk.

246911

Ordering Information

120 lb and 400 lb Grease Packages

Package Number		246914*	246915*	246916*	246917*
Ratio		50:1	50:1	50:1	50:1
Type of Package		Stationary supply package	Portable package with caster base	Portable package with 2-wheel cart	Stationary supply package
Container Size		120 lb (55 kg)	120 lb (55 kg)	120 lb (55 kg)	400 lb (180 kg)
Pump Part Number		246780	246780	246780	246781
Fluid Hose Size		1/4 in x 6 ft	1/4 in x 12 ft	1/4 in x 12 ft	1/4 in x 6 ft
Dispense Hose Kit		222072	236058	236058	222072
Dispense Kit Includes	12 ft Hose	–	109151	109151	–
	6 ft Hose	109150	–	–	109150
	6 ft Coupled Hose	203320	–	–	203320
	Air Coupler	–	114558	114558	–
	Air Fitting	–	169971	169971	–
	Z-Swivel	–	202577	202577	–
	90º Fitting(s)	155494 / 155541	–	–	155494 / 155541
	Pro-Shot Valve	–	242056	242056	–
Follower Plate		24F902	24F902	24F902	24F903
Drum Cover		24R350	24R350	24R350	200326
Portable Base		–	203622	203650	–
Instruction Manual		309967	309967	309967	309967

*Use 3/8 in (9.5 mm) air regulator (109075); must be ordered separately.

7 Year Warranty!

Ideal for Shops with Grease Transfer

Install the Fire-Ball 300 in grease dispense applications. A differential air motor ensures smooth the double-acting pump design provides reliable grease flow and accurate dispense.

Durable

Thick cast aluminum air motor housing offers unmatched durability.

Fewer Repairs

Fewer moving parts in the air motor assembly means less downtime and low repair cost.

Extended Seal Life

In-line pump design aligns the air motor piston and fluid piston rods to maximize seal life.

Superior Sealing

Non-metallic poppet valves offer positive sealing performance, even with contaminated “dirty” air environments for long life without repair.

Corrosion-Resistant

Corrosion-resistant design utilizes liquid salt nitriding, nickel plating, stainless steel, aluminum and chrome on key components for longer life.

Typical Applications

- Automotive dealerships
- Fast lube centers
- Service shops
- Heavy-duty dealerships
- Fleet services facilities
- In-plant
- Lube trucks
- Mining

Typical Fluids Handled

- Grease up to NLGI #2

Pump Performance

Fire-Ball 300 15:1 Pumps

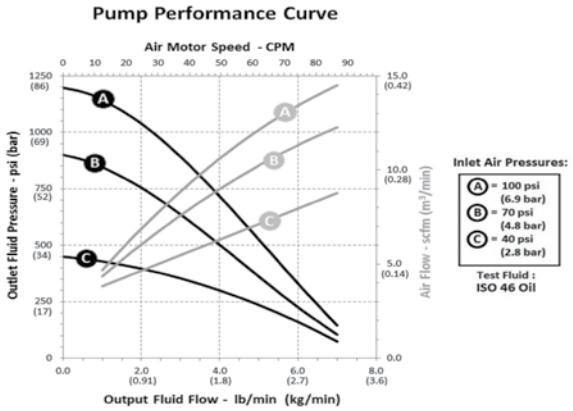

Fire-Ball 300 50:1 Pumps

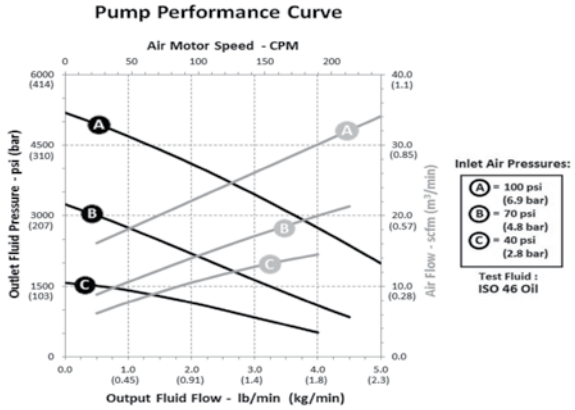

Technical Specifications

	Fire-Ball 300 15:1	Fire-Ball 300 50:1
Fluid Pressure Ratio	15:1	50:1
Air Motor Effective Diameter	3 in (76.2 mm)	3 in (76.2 mm)
Annual Usage	Up to 10,000 lb (4,535 kg)	Up to 10,000 lb (4,535 kg)
Maximum Fluid Working Pressure	2,700 psi (186 bar / 18.6 MPa)	8,400 psi (579 bar / 57.9 MPa)
Approximate Free Flow Rate @ 100 psi	7.5 lb/min (3.4 kg/min)	7.5 lb/min (3.4 kg/min)
Output per Cycle	1.29 oz (36.6 g)	0.34 oz (9.5 g)
Continuous Duty Flow Rate	0.7 lb/min (0.32 kg/min)	1.19 lb/min (0.54 kg/min)
Approximate Air Use and Flow @ 100 psi (80 cpm)	14 @ 6.5 lb/min (0.40 @ 2.9 kg/min)	21 @ 1.7 lb/min (0.59 @ 0.77 kg/min)
Air Inlet	3/8 in NPT(F)	3/8 in NPT(F)
Fluid Outlet	1/4 in NPT(F)	1/4 in NPT(F)
Air Operation Range	40 psi to 180 psi (2.8 bar to 12.5 bar)	30 psi to 140 psi (3.0 bar to 9.7 bar)
Max Recommended Pump Speed	66 cpm	76 cpm
Cycles per Pound (Kg)	12.4 cpp (27 cpk)	47.4 cpp (105 cpk)
Wetted Parts	Carbon steel, brass, copper, aluminum, PTFE, nitrile rubber, leather	Steel, brass, aluminum, acetal, nitrile rubber, polyurethane
Sound Pressure Level	77.8 dB(A)	77.8 dB(A)
Sound Power Level	85.6 dB(A)	85.6 dB(A)
Approximate Weight	22 lb (10 kg)	22 lb (10 kg)
Instruction Manual	306531	308883

Ordering Information

Fire-Ball 300 Grease Pumps

Part Number	Ratio	Description
206405	15:1	For 35 lb (16 kg) pail
206699	15:1	For 120 lb (55 kg) drum
206700	15:1	For 400 lb (180 kg) drum
239877	50:1	For 35 lb or 70 lb (16 kg or 32 kg) pail
239887	50:1	For 120 lb (55 kg) drum
239888	50:1	For 400 lb (180 kg) drum

Ordering Information

15:1 Grease Pump Packages

Package Number		222078	220170	220171
Type of Package		Stationary Pail Dispenser	Stationary Drum Dispenser	Cover-Mounted Drum Dispenser
Ratio		15:1	15:1	15:1
Container Size		35 lb (16 kg)	120 lb (55 kg)	400 lb (180 kg)
Pump Part Number		206405	206699	206700
Dispense Kit		222080	222081	222081
Dispense Kit Includes	Fluid Hose	1/4 in x 15 ft	1/4 in x 25 ft	1/4 in x 25 ft
	Hose Part Number	109165	109167	109167
	Air Coupler	110198	110198	110198
	Air Fitting	–	169971	169971
	Closed Nipple	156849	156849	156849
	Z-Swivel	202577	202577	202577
	Fitting(s)	169971	–	–
	Dispenser	Pro-Shot	Pro-Shot	Pro-Shot
	Dispenser Part Number	242056	242056	242056
	Air Regulator	110234	110234	110234
	Air Pressure Gauge	100960	100960	100960
Drum Cover		222058	204574	200326
Instruction Manual		307882	307882	307882

Ordering Information

50:1 25 to 50 lb Grease Pump Packages

Package Number		222069*	245694*	225827*	225773*	245695*	226012*
Type of Package		Portable pail dispenser	Portable pail dispenser	Stationary pail dispenser	Cart-mounted pail dispenser	Cart-mounted pail dispenser	Cart-mounted pail topper
Ratio		50:1	50:1	50:1	50:1	50:1	50:1
Container Size		25 lb to 50 lb (11 kb to 23 kg)	25 lb to 50 lb (11 kb to 23 kg)	35 lb to 50 lb (16 kg to 23 kg)	35 lb to 50 lb (16 kg to 23 kg)	35 lb to 50 lb (16 kg to 23 kg)	50 lb (23 kg)
Pump Part Number		239877	239877	239877	239877	239877	239877
Dispense Kit		222070	245697	222070	222070	245697	222070
Dispense Kit Includes	Fluid Hose	1/4 in x 12 ft	1/4 in x 12 ft	1/4 in x 12 ft	1/4 in x 12 ft	1/4 in x 12 ft	1/4 in x 12 ft
	Hose Part Number	109151	109151	109151	109151	109151	109151
	Air Coupler	114558	114558	114558	114558	114558	114558
	Air Fitting	169971	169971	169971	169971	169971	169971
	Z-Swivel	202577	202577	202577	202577	202577	202577
	Dispenser	Pro-Shot	Accu-Shot	Pro-Shot	Pro-Shot	Accu-Shot	Pro-Shot
	Dispenser Part Number	242056	233807	242056	242056	233807	242056
Follower Plate		24F901	220653	**	**	**	–
Drum Cover		222059	222059	24R350	24R350	204574	–
Holster		–	–	203976	203976	203976	203976
Container		–	–	204134	204134	204134	–
Portable Base		–	–	–	203650	203650	203650
Elevator		–	–	–	–	–	203664
Inductor Plate		–	–	–	–	–	204351
Instruction Manual		307878	307878	307878	307878	307878	307878

*Use 3/8 in (9.5 mm) air regulator (109075); must be ordered separately.
**Order follower plate 220654 separately, if needed.

Ordering Information

50:1 120 lb Grease Pump Packages

Package Number		225006*	225026*	26C185*	26C186*	245696*	222245*
Type of Package		Portable with caster base	Portable with 2-wheel cart	Portable with caster base	Portable with 2-wheel cart	Portable with 2-wheel cart	Portable with heavy duty cart
Ratio		50:1	50:1	50:1	50:1	50:1	50:1
Container Size		120 lb (55 kg)	120 lb (55 kg)	120 lb (55 kg)	120 lb (55 kg)	120 lb (55 kg)	120 lb (55 kg)
Pump Part Number		239887	239887	239887	239887	239887	239887
Dispense Kits		222070	222070	26C183	26C183	245697	222383
Dispense Kit Includes	Fluid Hose	1/4 in x 12 ft	1/4 in x 12 ft	1/4 in x 12 ft	1/4 in x 12 ft	1/4 in x 12 ft	1/4 in x 25 ft
	Hose Part Number	109151	109151	109151	109151	109151	109154
	6 ft Coupled Hose	–	–	–	–	–	–
	Air Coupler	114558	114558	114558	114558	114558	114558
	Air Fitting	169971	169971	169971	169971	169971	169971
	Z-swivel	202577	202577	202577	202577	202577	202577
	Fitting(s)	–	–	–	–	–	–
	Dispenser	Pro-Shot	Pro-Shot	Pro-Shot	Pro-Shot	Accu-Shot	Pro-Shot
	Dispenser Part Number	242056	242056	26C184	26C184	233807	242056
Fluid Hose Size		See kit above	See kit above	See kit above	See kit above	See kit above	See kit above
Air Hose Size		–	–	–	–	–	–
Meter		See kit above	See kit above	See kit above	See kit above	See kit above	See kit above
Meter Part Number		See kit above	See kit above	See kit above	See kit above	See kit above	See kit above
Follower Plate		24F902	24F902	24F902	24F902	220654	24F902
Drum Cover		24R350	24R350	24R350	24R350	204574	222060
Holster		203976	203976	203976	203976	203976	–
Portable Base		203622	203650	203622	203650	203650	222243
Elevator		–	–	–	–	–	–
Pump Support		–	–	–	–	–	–
Hold Down Kit		–	–	–	–	–	222061
Instruction Manual		307878	307878	307878	307878	307878	307878

*Use 3/8 in (9.5 mm) air regulator (109075); must be ordered separately.

Ordering Information

50:1 120 lb Grease Pump Packages (Cont.)

Package Number		225014*	222073*
Type of Package		Stationary supply	Stationary supply topper-inductor
Ratio		50:1	50:1
Container Size		120 lb (55 kg)	120 lb (55 kg)
Pump Part Number		239887	239887
Dispense Kits		222072	–
Dispense Kit Includes	Fluid Hose	1/4 in x 6 ft	–
	Hose Part Number	109150	–
	6 ft Coupled Hose	203320	–
	Air Coupler	–	–
	Air Fitting	–	–
	Z-swivel	–	–
	Fitting(s)	155494/155541	–
	Dispenser	–	–
	Dispenser Part Number	–	–
Fluid Hose Size		See kit above	–
Air Hose Size		See kit above	–
Follower Plate		24F902	–
Drum Cover		24R350	–
Holster		–	–
Portable Base		–	–
Elevator		–	204121
Pump Support		–	222074
Hold Down Kit		–	–
Instruction Manual		307880	306523

*Use 3/8 in (9.5 mm) air regulator (109075); must be ordered separately.

50:1 400 lb Grease Pump Packages

Package Number		225016*	226013*
Type of Package		Stationary supply	Stationary supply topper-inductor
Ratio		50:1	50:1
Container Size		400 lb (180 kg)	400 lb (180 kg)
Pump Part Number		239888	239888
Hose and Fitting Kits		222072	204467
Dispense Kit Includes	Fluid Hose	1/4 in x 6 ft	1/4 in x 6 ft
	Hose Part Number	109150	109150
	6 ft Coupled Hose	203320	–
	Fitting(s)	155494/155541	100206/156971/205528
Air Hose Size		3/8 in x 6 ft	3/8 in x 6 ft
Follower Plate		24F903	–
Drum Cover		200326	–
Elevator		–	204385
Pump Support		–	204461
Inductor Plate		–	204353
Base		–	205339
Instruction Manual		307880	306556

*Use 3/8 in (9.5 mm) air regulator (109075); must be ordered separately.

Ordering Information

50:1 Grease Pump Lube Truck Packages

Package Number		222085*	222071*
Type of Package		Lube truck	Lube truck
Ratio		50:1	50:1
Container Size		120 lb (55 kg)	400 lb (180 kg)
Pump Part Number		239887	239888
Dispense Kits		222072	222072
Dispense Kit Includes	Fluid Hose	1/4 in x 6 ft	1/4 in x 6 ft
	Hose Part Number	109150	109150
	6 ft Coupled Hose	203320	203320
	Fitting(s)	155494/155541	155494/155541
Air Hose Size		3/8 in x 6 ft	3/8 in x 6 ft
Follower Plate		220654	223845
Drum Cover		222060	207366
Hold Down Kit		222061	207361
Instruction Manual		307880	307880

*Use 3/8 in (9.5 mm) air regulator (109075); must be ordered separately.

Ordering Information

50:1 Grease Pump Side Pocket and Horizontal Mount Packages

Package Number		244644	244645
Type of Package		Side Pocket Mount	Horizontal Mount
Ratio		50:1	50:1
Pump Part Number		239888	239877
Dispense Kits		222072	222072
Dispense Kit Includes	Fluid Hose	1/4 in x 6 ft	1/4 in x 6 ft
	Hose Part Number	109150	109150
	6 ft Coupled Hose	203320	203320
	Fitting(s)	155494/155541	155494/155541
Air Hose Size		3/8 in x 6 ft	3/8 in x 6 ft
Pump Mount Bracket		3 in (f) Coupler – 512874	3 in (f) Coupler – 512874
Air Regulator		109075	109075
Air Shut-Off Valve		110224	110224
Installation Kit		948393	948393
Instruction Manual		309350	309350

10 Year Warranty!

The Pump of Choice for Your Most Demanding Applications!

The Fire-Ball 425 features a large air motor to supply the power you need for long pipe runs and higher-volume dispensing. An ideal choice for applications where multiple dispenses happen at the same time.

Durable Casting

Thick cast aluminum air motor housing offers unmatched durability.

Fewer Repairs

Fewer moving parts in the air motor assembly means less downtime and low repair cost.

Extended Seal Life

In-line pump design aligns the air motor piston and fluid piston rods to maximize seal life.

Superior Sealing

Non-metallic poppet valves offer positive sealing performance, even with contaminated “dirty” air environments for long life without repair.

Corrosion-Resistant

Corrosion-resistant design utilizes liquid salt nitriding, nickel plating, stainless steel, aluminum and chrome on key components for longer life.

Typical Applications

- Automotive dealerships
- Fast lube centers
- Service shops
- Heavy-duty dealerships
- Fleet services facilities
- In-plant
- Lube trucks
- Mining

Typical Fluids Handled

- Grease up to NLGI #2

Fire-Ball® 425 Grease Pumps

Pump Performance

Fire-Ball 425 10:1 Pumps

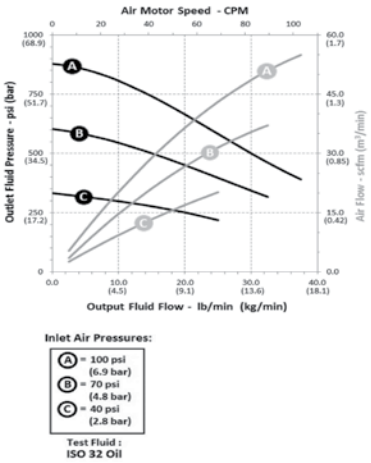

Fire-Ball 425 50:1 Pumps

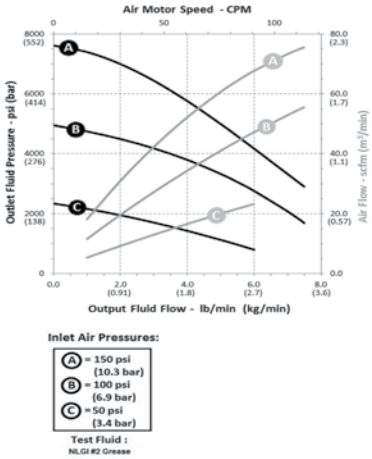

Fire-Ball 425 75:1 Pumps

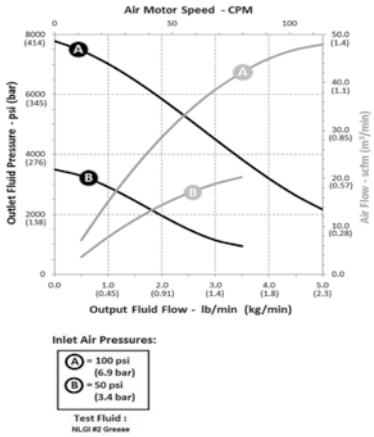

Technical Specifications

	Fire-Ball 425 10:1	Fire-Ball 425 50:1	Fire-Ball 425 75:1
Fluid Pressure Ratio	10:1	50:1	75:1
Air Motor Effective Diameter	4.25 in (108 mm)	4.25 in (108 mm)	4.25 in (108 mm)
Annual Usage	20,000+ lb (9,072+ kg)	20,000+ lb (9,072+ kg)	20,000+ lb (9,072+ kg)
Maximum Fluid Working Pressure	1,800 psi (124 bar / 12.4 MPa)	7,500 psi (517 bar / 51.7 MPa)	7,500 psi (517 bar / 51.7 MPa)
Approximate Free Flow Rate @ 100 psi	29 lb/min (13.1 kg/min)	9 lb/min (4.1 kg/min)	6.5 lb/min (2.9 kg/min)
Output per Cycle	5.82 oz (164.7 g)	1.06 oz (30 g)	0.71 oz (20 g)
Continuous Duty Flow Rate	3.5 lb/min (1.59 kg/min)	3.35 lb/min (1.52 kg/min)	1.95 lb/min (0.88 kg/min)
Approximate Air Use and Flow @ 100 psi (80 cpm)	45 @ 29 lb/min (1.3 @ 13 kg/min)	43 @ 5.3 lb/min (1.2 @ 2.4 kg/min)	43 @ 3.5 lb/min (1.2 @ 1.6 kg/min)
Air Inlet	1/2 in NPT(F)	1/2 in NPT(F)	1/2 in NPT(F)
Fluid Outlet	1 in NPT(F)	3/8 in NPT(F)	3/8 in NPT(F)
Air Operation Range	40 psi to 180 psi (2.8 bar to 12.5 bar)	40 psi to 150 psi (2.8 bar to 10.4 bar)	40 psi to 100 psi (2.8 bar to 7 bar)
Max Recommended Pump Speed	60 cpm	60 cpm	60 cpm
Cycles per Pound	2.75 cpp	15.1 cpp	22.7 cpp
Cycles per Kg	6 cpk	33 cpk	50 cpk
Wetted Parts	Steel, brass, aluminum, leather, Buna-N	CS, brass, aluminum, leather	CS, brass, aluminum, leather
Sound Pressure Level	80.9 dB(A)	80.9 dB(A)	80.9 dB(A)
Sound Power Level	94.6 dB(A)	94.6 dB(A)	94.6 dB(A)
Approximate Weight	38 lb (17.2 kg)	34 lb to 37 lb (15 kg to 17 kg)	30 lb to 37 lb (14 kg to 17 kg)
Instruction Manual	309407	306674	308777

Ordering Information

Fire-Ball 425 Grease Pumps

Part Number	Ratio	Description
965124	10:1	Stubby pump
965129*	10:1	For 400 lb (180 kg) drum
205394	50:1	For 120 lb (55 kg) drum
205395	50:1	For 400 lb (180 kg) drum

Part Number	Ratio	Description
239731	75:1	For 35 or 70 lb (16 or 32 kg) pail
239729	75:1	For 120 lb (55 kg) drum
239730	75:1	For 400 lb (180 kg) drum

*Includes 2 in NPT Bung Adapter (part number 222308).

Ordering Information

50:1 120 lb and 400 lb Grease Pump Packages

Package Number		223108*	225781*	226018*
Type of Package		Stationary Supply	Stationary Supply	Stationary Supply Topper-Inductor
Ratio		50:1	50:1	50:1
Container Size		120 lb (55 kg)	400 lb (180 kg)	400 lb (180 kg)
Pump Part Number		205394	205395	205395
Dispense Kits		222076	222076	205102
Dispense Kit Includes	Fluid Hose	3/8 in x 6 ft	3/8 in x 6 ft	3/8 in x 6 ft
	Hose Part Number	109163	109163	109163
	6 ft Coupled Hose	205418	205418	–
	Fitting(s)	155470/155494	155470/155494	156859/196220/205528
Air Hose Size		1/2 in x 6 ft	1/2 in x 6 ft	1/2 in x 6 ft
Drum Cover		204574	200326	–
Follower Plate		223344	223846	–
Pump Support		–	–	204461
Elevator		–	–	204385
Inductor Plate		–	–	205699
Base		–	–	205339
Instruction Manual		307880	307880	306556

*Use 1/2 in (12.7 mm) air regulator (104266) and gauge (100960); must be ordered separately.

Ordering Information

75:1 120 lb and 400 lb Grease Pump Packages

Package Number		244635*	244636*	244637*
Type of Package		Stationary Cover-Mount	Stationary Cover-Mount	Stationary Inductor
Ratio		75:1	75:1	75:1
Container Size		120 lb (55 kg)	400 lb (180 kg)	400 lb (180 kg)
Pump Part Number		239729	239730	239730
Dispense Kits		222076	222076	205102
Dispense Kit Includes	Fluid Hose	3/8 in x 6 ft	3/8 in x 6 ft	3/8 in x 6 ft
	Hose Part Number	109163	109163	109163
	6 ft Coupled Hose	205418	205418	–
	Fitting(s)	155470/155494	155470/155494	156859/196220/205528
Air Hose Size		1/2 in x 6 ft	1/2 in x 6 ft	1/2 in x 6 ft
Drum Cover		204574	200326	–
Follower Plate		223344	223846	–
Pump Support		–	–	204461
Elevator		–	–	204385
Inductor Plate		–	–	205699
Base		–	–	205339
Instruction Manual		307880	307880	306556

*Use 1/2 in (12.7 mm) air regulator (104266) and gauge (100960); must be ordered separately.

Ordering Information

50:1 and 75:1 Grease Pump Lube Truck Packages

Package Number		223107*	222075*	243817*	243818**
Type of Package		Lube Truck	Lube Truck	Lube Truck	Lube Truck
Ratio		50:1	50:1	75:1	75:1
Container Size		120 lb (55 kg)	400 lb (180 kg)	120 lb (55 kg)	400 lb (180 kg)
Pump Part Number		205394	205395	239729	239730
Dispense Kits		222076	222076	222076	222076
Dispense Kit Includes	Fluid Hose	3/8 in x 6 ft	3/8 in x 6 ft	3/8 in x 6 ft	3/8 in x 6 ft
	Hose Part Number	109163	109163	109163	109163
	6 ft Coupled Hose	205418	205418	205418	205418
	Fitting(s)	155470/155494	155470/155494	155470/155494	155470/155494
Air Hose Size		1/2 in x 6 ft	1/2 in x 6 ft	1/2 in x 6 ft	1/2 in x 6 ft
Drum Cover		222060	207366	222060	207366
Follower Plate		223344	223846	223344	223846
Hold Down Kit		222061	207361	222061	207361
Instruction Manual		307880	307880	307880	307880

*Use 1/2 in (12.7 mm) air regulator (104266) and gauge (100960); must be ordered separately.
**Use 3/8 in (9.5 mm) air regulator (109075); must be ordered separately.

Ordering Information

Grease Pump RAM Packages

		Part 257435 (Ram Assembly) not shown	Part 257435 (Ram Assembly) not shown
Package Number		244905	244906
Type of Package		Stationary Ram	Stationary Ram
Ratio		50:1	75:1
Container Size		400 lb (180 kg)	400 lb (180 kg)
Pump Part Number		Fire-Ball 425 – 205395	Fire-Ball 425 – 239730
Dispense Kits		222076	222076
Dispense Kit Includes	Fluid Hose	3/8 in x 6 ft	3/8 in x 6 ft
	Hose Part Number	109163	109163
	6 ft Coupled Hose	205418	205418
	Fitting(s)	155470/155494	155470/155494
Air Hose Size		1/2 in x 6 ft	1/2 in x 6 ft
Ram		257435	257435
Adapter Kit		224266	224266
Air Regulator and Gauge		*	244844
Ram Plate Seal Kit		247335	247335
Pump Mount Kit		247337	247337
Instruction Manual		309345	309345

*Air gauge included with RAM controller.

RAM-Mount

- Force feed high volume pumps
- Extreme viscous grease
- Reduce waste
- Clean and convenient method of drum change

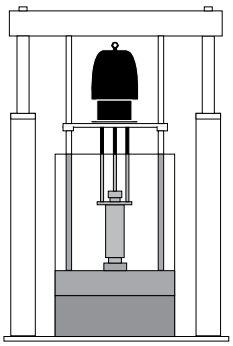

Ordering Information

50:1 and 75:1 Grease Pump Side Pocket and Horizontal Mount Packages

Package Number		244646	244647	244648
Type of Package		Side Pocket Mount	Side Pocket Mount	Horizontal Mount
Ratio		50:1	75:1	75:1
Pump Part Number		205395	239730	239731
Dispense Kits		222076	222076	222076
Dispense Kit Includes	Fluid Hose	3/8 in x 6 ft	3/8 in x 6 ft	3/8 in x 6 ft
	Hose Part Number	109163	109163	109163
	6 ft Coupled Hose	205418	205418	205418
	Fitting(s)	155470/155494	155470/155494	155470/155494
Air Hose Size		1/2 in x 6 ft	1/2 in x 6 ft	1/2 in x 6 ft
Pump Mount Bracket		3 in (f) Coupler – 512874	3 in (f) Coupler – 512874	3 in (f) Coupler – 512874
Air Regulator		244844	244844	244844
Air Shut-Off Valve		110225	110225	110225
Installation Kit		948392	948392	948392
Instruction Manual		309350	309350	309350

Ordering Information

Air Regulators

Part Number	Description
109075	3/8 in NPT (fbe) with gauge
244844	1/2 in NPT (fbe) with gauge

Bleed-Type Air Shut-Off Valves

Part Number	Description
110223	1/4 in NPT
110224	3/8 in NPT
110225	1/2 in NPT
110226	3/4 in NPT

Bung Adapters

Part Number	Dimensions	Compatible Pumps
239965	1.65 in ID	Fire-Ball 425, 50:1 Fire-Ball 425, 75:1
239966	1.29 in ID	Fire-Ball 300, 15:1 Fire-Ball 300, 50:1

Dispense Hose and Fitting Kits

Part Number	Compatible Pump(s)	Includes							
		Fluid Hose Size	Fluid Hose	Grease Dispense Valve	Z-Swivel	3/8 in Closed Nipple	Quick-Disconnect Nipple	Quick-Disconnect Coupler	3/8 in Air Regulator
222080	Fire-Ball 300, 15:1	1/4 in x 15 ft	109165	242056	202577	156849	169971	110198	110234
222081	Fire-Ball 300, 15:1	1/4 in x 25 ft	109167	242056	202577	156849	169971	110198	110234
236058	Mini Fire-Ball 225, 50:1	1/4 in x 12 ft	109151	242056	202577	–	169971	114558	–
222070	Fire-Ball 300, 50:1	1/4 in x 12 ft	109151	242056	202577	–	169971	114558	–
26C183	Fire-Ball 300, 50:1	1/4 in x 12 ft	109151	26C184	202577	–	169971	114558	–
222383	Mini Fire-Ball 225, 50:1 Fire-Ball 300, 50:1	1/4 in x 25 ft	109154	242056	202577	–	169971	114558	–

Hose and Fitting Kits

Part Number	Pressure Rating	Compatible Pumps	Includes			
			6 ft Air Hose	Air Hose Swivel Elbow	6 ft Fluid Hose	Fluid Hose Swivel Elbow
222072	5,000 psi (345 bar)	Fire-Ball 300, 50:1	203320	155494	109150	155541
222076	4,000 psi (276 bar)	Fire-Ball 425, 50:1	205418	155470	109163	155494

Ordering Information

Drum Covers

Part Number	Description	Compatible Pumps
222059	Cover for 35 lb (16 kg) pails	Mini Fire-Ball 225, 50:1 Fire-Ball 300, 50:1
24R350	LD Cover for open-head 35 lb (16 kg), 70 lb (32 kg) or 120 lb (55 kg) drums	Mini Fire-Ball 225, 50:1 Fire-Ball Pumps
204574	SD Cover for open-head 70 lb (32 kg) or 120 lb (55 kg)	Mini Fire-Ball 225, 50:1 Fire-Ball Pumps
200326	Cover for open-head 400 lb (180 kg) drums	Mini Fire-Ball 225, 50:1 Fire-Ball 300, 15:1 Fire-Ball 300, 50:1 Fire-Ball 425, 10:1 and 50:1
160754	Bung-adapter plate for mounting pump to 120 lb (55 kg) or 400 lb (180 kg) drum covers	Fire-Ball Pumps

Drum Elevator

Part Number	Description	Includes		
		Cover Support	Drum Elevator	Air Control Kit
241663	Air-powered elevator to speed up 400 lb (180 kg) drum changes	207562	204385	207561

Mounting Accessories for Fire-Ball Pumps

	Part Number	Description
	948393	Flange Adapter (male) for Fire-Ball 300 Pumps
	948392	Flange Adapter (male) for Fire-Ball 425 Pumps
	512874	Coupler (female), 3 in thread

Ordering Information

Follower Plates

Part Number	Container Size	Flexible Wiper	Compatible Pumps
24F901	35 lb (16 kg)	16F769	LD 50:1 Mini Fire-Ball 225, 50:1 Fire-Ball 300, 15:1 Fire-Ball 300, 50:1
24F902	70 lb (32 kg) 120 lb (55 kg)	16F781	LD 50:1 Mini Fire-Ball 225, 50:1 Fire-Ball 300, 15:1 Fire-Ball 300, 50:1
24F903	400 lb (180 kg)	16F784	LD 50:1 Mini Fire-Ball 225, 50:1 Fire-Ball 300, 15:1 Fire-Ball 300, 50:1
220653	35 lb (16 kg)	183241	Mini Fire-Ball 225, 50:1 Fire-Ball 300, 15:1 Fire-Ball 300, 50:1
220654	70 lb (32 kg) 120 lb (55 kg)	183243	Mini Fire-Ball 225, 50:1 Fire-Ball 300, 15:1 Fire-Ball 300, 50:1
223845	400 lb (180 kg)	186463	Mini Fire-Ball 225, 50:1 Fire-Ball 300, 15:1 Fire-Ball 300, 50:1
204130	400 lb (180 kg)	–	Mini Fire-Ball 225, 50:1 Fire-Ball 300, 15:1 Fire-Ball 300, 50:1
223344	120 lb (55 kg)	183243	Fire-Ball 425, 50:1 Fire-Ball 425, 75:1
223700	120 lb (55 kg)	183243	Dyna-Star 5:1
223701	400 lb (180 kg)	186463	Dyna-Star 5:1 Fire-Ball 425 10:1
223846	400 lb (180 kg)	186463	Fire-Ball 425, 50:1 Fire-Ball 425, 75:1
205337	400 lb (180 kg)	-	Fire-Ball 425, 50:1 Fire-Ball 425, 75:1

High-Pressure Grease Shut-Off Valve

Part Number	Description	Pressure Rating	Inlet
202869	High-pressure needle valve	5,000 psi (345 bar)	1/2 in

Lincoln-to-Graco Adapter Kit

Part Number	Description	Compatible Pump
241246	For replacing a Series 20 Lincoln	Fire-Ball 300, 50:1

Ordering Information

Portable Bases

	Part Number	Description
	131183	Drum dolly, 35 lb (16 kg)
	131184	Drum dolly, 120 lb (54 kg)
	129645	Drum dolly, 400 lb (182 kg)
	203622	Caster base for 120 lb (54 kg) drums

Carts

	Part Number	Description	Compatible Container Size
	203650	Drums fit onto recess on formed base. Rim clamps secure drum onto cart.	35 lb (16 kg) 70 lb (32 kg) 120 lb (55 kg)
	222243	Heavy-duty drum cart with pneumatic wheels	120 lb (55 kg)
	111470	Heavy-duty drum truck on roll-around base	400 lb (180 kg)

Pro-Shot Dispense Valves

	Part Number	Description
	242055	1/4 in NPT(F) inlet without coupler or extension
	242056	1/4 in NPT(F) inlet with coupler and extension 200389
	242057	3/8 in NPT(F) inlet without coupler or extension
	242058	3/8 in NPT(F) inlet with coupler and extension 200389
	224872	Includes 30 in (76.2 cm) whip hose (109148), Z-Swivel (202577), and grease valve (242056)

Swivel

	Part Number	Description
	202577	Z-Swivel allows non-binding movement for hard-to-reach locations, 1/4-18 NPT

GT 750 36:1 Grease Pumps

Grease

Fewer Strokes and Longer Pump Life

The GT 750 pump was engineered to perform in challenging applications and changing environments. The large 7.5-inch air motor and pump lower combination allows the GT 750 pump to move the same amount of grease with up to four times fewer pump strokes.

Up to 32 lb/min (13.6 kg/min)

Efficient Air Motor

Use less air to move more grease.

Proven Pump Technology

Based on Graco NXT™ pump technology.

High Flow Rates

Up to 32 lb/min of grease.

Multiple Tank Options

Available in 35, 120 and 400 lb down tube lengths.

High Volume Per Stroke

Pump more grease without having to drive pump too quickly to damage seals.

Typical Applications

- Lube trucks
- Mining
- Heavy-duty dealerships
- Fleet service facilities
- In-plant

Typical Fluids Handled

- Grease up to NLGI #2

Pump Performance

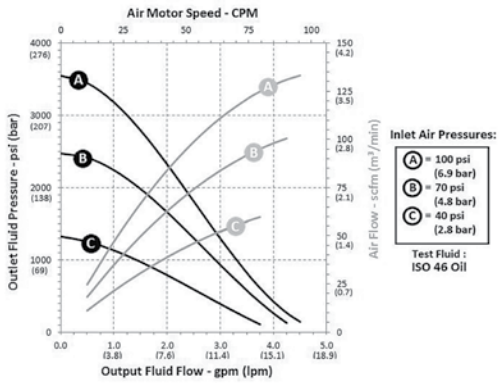

Technical Specifications

Fluid Pressure Ratio	36:1
Air Pressure Operating Range	40-100 psi (3-7 bar)
Maximum Working Pressure	3,600 psi (248 bar)
Maximum Recommended Continuous Pump Speed	60 cycles per minute
Air Motor Effective Diameter	7.5 in (190 mm)
Stroke	4.75 in (121 mm)
Air Inlet	1/2 in NPT
Fluid Outlet	1 in NPT
Maximum Delivery	32 lb/min (13.6 kg/min)
Pump Weight	59 lb (26.8 kg)
Wetted Parts	Steel, brass, Buna-N, urethane, ductile iron, aluminum
Sound Power (measured at 70 psi [4.8 bar], 20 CPM per ISO-9414-2)	77.2 dBa
Sound Pressure (tested at 3.28 ft [1 m] from equipment)	70.5 dBa
Pump Cycles Per Pound	3 cycles
Pump Cycles Per KG	6 cycles
Warranty	Five years overall and 1 year wear parts
Instruction Manual	3A5363

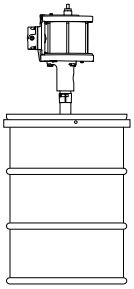

Drum Mount

Side Pocket Mount

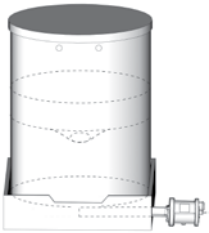

Horizontal Mount

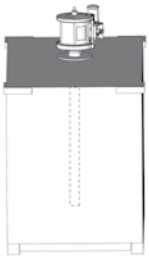

Top Mount

Ordering Information

GT 750 36:1 Grease Pumps

	Part Number	Description
	24W498	GT 750, 36:1 Grease Pump, stubby length
	25D116	GT 750, 36:1 Grease Pump, 120 lb length
	24W337	GT 750, 36:1 Grease Pump, 400 lb length
	25P544	GT 750, 36:1 Grease Pump, 400 lb length inductor

Accessories

Cam Lock Adapters

	Part Number	Description
	131380	Male Cam Lock Adapter – 3 in
	131394	Female Cam Lock Adapter – 3 in

Drum Covers

	Part Number	Description
	204574	Cover for 120 lb (54 kg) drums
	200326	Cover for 400 lb (182 kg) drums
	160754	Bung Adapter Plate (used to mount pump to drum cover) – 2 in

Follower Plates

	Part Number	Description
	223700	Follower plate for 120 lb (54 kg) drums
	223701	Follower plate for 400 lb (182 kg) drums

Move Large Amounts of Grease Fast

Tested to outperform and outlast all other pumps on the market – with its long-life packing design and intuitive, easy-to-use controls – the NXT™ High-Flo pump is the best value for the money. Fewer parts, faster repairs, and long-lasting durability.

Optional DataTrak Control

Intuitive, easy-to-use DataTrak™ control gives you pump diagnostics, material usage tracking and pump runaway protection.

NXT Air Motor

Modular design for easier maintenance with rugged body armor that won't rust or dent.

Modular Air Valves

Easy-to-repair valve eliminates stalling and contains deicing controls.

Integrated Air Controls

Easy-turn, lockable regulator is front-mounted for easy access. Compact and modular with built-in filtration.

Piston Valve with Floating Piston Seal

For maximum pressure balance over a range of material viscosities.

Typical Applications

- Fleet services facilities
- In-plant
- Mining

Typical Fluids Handled

- Grease up to NLGI #2

Pump Performance

Inlet Pressures:

A = 100 psi (6.9 bar) air pressure B = 70 psi (4.8 bar) air pressure C = 40 psi (2.8 bar) air pressure

TEST FLUID: No. 10 Weight Oil

NXT 14:1 Check-Mate Pumps

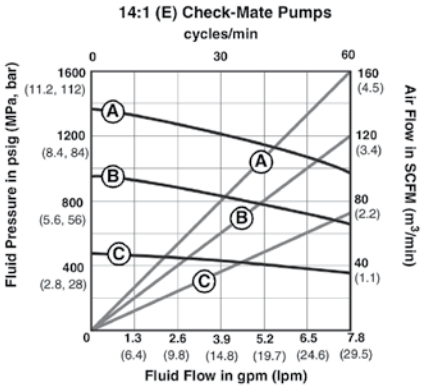

NXT 26:1 Check-Mate Pumps

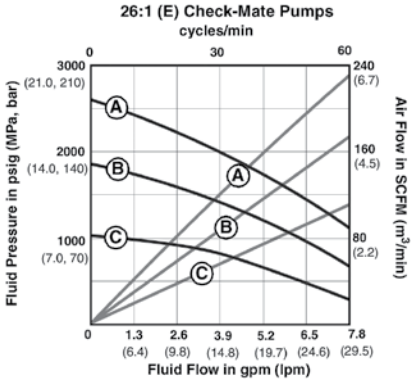

NXT 29:1 Check-Mate Pumps

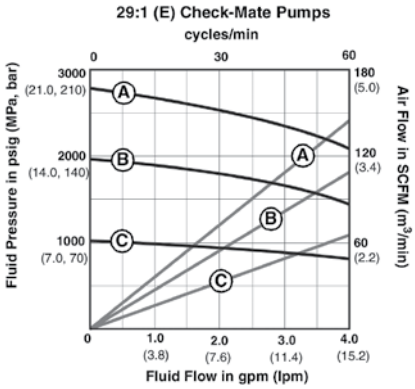

Technical Specifications

	NXT Check-Mate 14:1	NXT Check-Mate 26:1	NXT Check-Mate 29:1
Fluid Pressure Ratio	14:1	26:1	29:1
Air Motor	NXT 3400	NXT 6500	NXT 3400
Air Motor Effective Diameter	7.5 in (191 mm)	10.4 in (264 mm)	7.5 in (191 mm)
Pump Lower	L500CS	L500CS	L250CS
Maximum Fluid Working Pressure	1,400 psi (97 bar / 9.7 MPa)	2,600 psi (179 bar / 17.9 MPa)	2,900 psi (200 bar / 20 MPa)
Output per Cycle	15.4 oz (435 g)	15.4 oz (435 g)	7.7 oz (218 g)
Air Inlet	3/4 in NPT(F)	3/4 in NPT(F)	3/4 in NPT(F)
Fluid Outlet	1-1/2 in NPT(M)	1-1/2 in NPT(M)	1 in NPT(F)
Air Operation Range	0 psi to 100 psi (0 bar 7 bar)	0 psi to 100 psi (0 bar to 7 bar)	0 psi to 100 psi (0 bar to 7 bar)
Max Recommended Pump Speed	20 cpm	20 cpm	20 cpm
Cycles per Pound	1.0 cpp	1.0 cpp	2.1 cpp
Cycles per Kg	2 cpk	2 cpk	5 cpk
Wetted Parts	303, 304, 316 and 17-4PH grades of stainless steel; ductile iron and carbon steel, electroless nickel plated; carbon steel, zinc and electroless nickel plated; E52100 and ETD 150 alloy steel; PTFE; UHMWPE; carbon-filled PTFE; acetal	303, 304, 316 and 17-4PH grades of stainless steel; ductile iron and carbon steel, electroless nickel plated; carbon steel, zinc and electroless nickel plated; E52100 and ETD 150 alloy steel; PTFE; UHMWPE; carbon-filled PTFE; acetal	ETD 150, 41L40, and 4140 alloy steel; 304, 316, 17-4PH and 440C grades of stainless steel; acetal; carbon-filled PTFE; carbon steel; ductile iron; electroless nickel, zinc and chrome plating; PTFE; UHMWPE
Sound Pressure Level	77 dB(A)	80 dB(A)	77 dB(A)
Sound Power Level	87 dB(A)	90 dB(A)	87 dB(A)
Approximate Weight	152 lb (69 kg)	169 lb (77 kg)	128 lb (58 kg)
Instruction Manual	System – 312863 Pump – 312376 Pump Lower – 312375 Air Motor – 311238	System – 312863 Pump – 312376 Pump Lower – 312375 Air Motor – 311238	System – 312863 Pump – 312376 Pump Lower – 312375 Air Motor – 311238

NXT Check-Mate® Grease Pumps

Pump Performance

Inlet Pressures:

A = 100 psi (6.9 bar) air pressure B = 70 psi (4.8 bar) air pressure C = 40 psi (2.8 bar) air pressure

TEST FLUID: No. 10 Weight Oil

NXT 55:1 Check-Mate Pumps

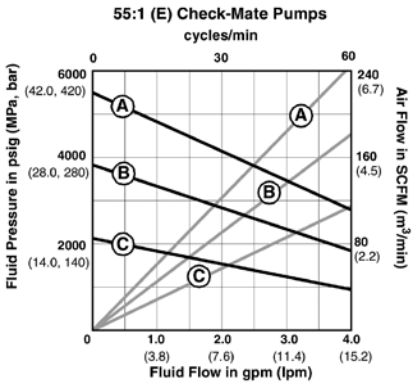

NXT 63:1 Check-Mate Pumps

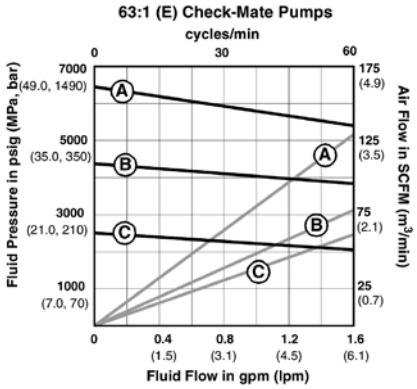

NXT 68:1 Check-Mate Pumps

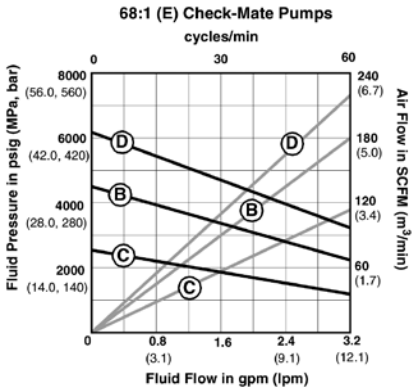

Technical Specifications

	NXT Check-Mate 55:1	NXT Check-Mate 63:1	NXT Check-Mate 68:1
Fluid Pressure Ratio	55:1	63:1	68:1
Air Motor Effective Diameter	10.4 in (264 mm)	7.5 in (191 mm)	10.4 in (264 mm)
Maximum Fluid Working Pressure	5,500 psi (379 bar / 37.9 MPa)	4,500 psi (310 bar / 31 MPa)	5,300 psi (366 bar / 36.6 MPa)
Output per Cycle	7.7 oz (218 g)	3.1 oz (87 g)	6.1 oz (174 g)
Air Inlet	3/4 in NPT(F)	3/4 in NPT(F)	3/4 in NPT(F)
Fluid Outlet	1 in NPT(F)	3/4 in NPT(M)	1 in NPT(F)
Air Operation Range	0 psi to 100 psi (0 bar to 7 bar)	0 psi to 72 psi (0 bar to 4.9 bar)	0 psi to 78 psi (0 bar to 5.4 bar)
Max Recommended Pump Speed	20 cpm	20 cpm	20 cpm
Cycles per Pound	2.1 cpp	5.2 cpp	2.6 cpp
Cycles per Kg	5 cpk	11 cpk	6 cpk
Wetted Parts	ETD 150, 41L40 and 4140 alloy steel; 304 and 17-4PH grades of stainless steel; acetal; carbon-filled PTFE; CS; ductile iron; eNi, Zn and chrome plating; UHMWPE	ETD 150, 41L40 and 4140 alloy steel; 304 and 17-4PH grades of stainless steel; acetal; carbon-filled PTFE; CS; ductile iron; eNi, Zn and chrome plating; UHMWPE	ETD 150, 41L40 and 4140 alloy steel; 304, 316 and 17-4PH grades of stainless steel; acetal; carbon-filled PTFE; CS; ductile iron; eNi, Zn and chrome plating; PTFE; UHMWPE
Sound Pressure Level	80 dB(A)	87 dB(A)	80 dB(A)
Sound Power Level	90 dB(A)	87 dB(A)	90 dB(A)
Approximate Weight	145 lb (66 kg)	101 lb (46 kg)	145 lb (66 kg)
Instruction Manual	System – 312863 Pump – 312376 Pump Lower – 312375 Air Motor – 311238	System – 312863 Pump – 312376 Pump Lower – 312375 Air Motor – 311238	System – 312863 Pump – 312376 Pump Lower – 312375 Air Motor – 311238

Ordering Information

Pump Packages with DataTrak

Package Number	247973	247976	247974	247977	247975	247978
Ratio	14:1	26:1	29:1	55:1	63:1	68:1
Pump with DataTrak	P14MCS	P26MCS	P29MCS	P55MCS	P63MCS	P68MCS
Mounting Type	Floor Standing	Floor Standing	Floor Standing	Floor Standing	Floor Standing	Floor Standing
Mounting Number	223952	223952	223952	223952	223952	223952
3/4 in x 6 ft Air Hose	208610	208610	208610	208610	208610	208610
1 in x 6 ft Fluid Hose	115042	244657	244657	244657	244657	244657

Pump Packages without DataTrak

Package Number	24E006	24E007	24E008	24E009	24E010	24E011
Ratio	14:1	26:1	29:1	55:1	63:1	68:1
Pump without DataTrak	P14DCS	P26DCS	P29DCS	P55DCS	P63DCS	P68DCS
Mounting Type	Floor Standing	Floor Standing	Floor Standing	Floor Standing	Floor Standing	Floor Standing
Mounting Number	223952	223952	223952	223952	223952	223952
3/4 in x 6 ft Air Hose	208610	208610	208610	208610	208610	208610
1 in x 6 ft Fluid Hose	115042	244657	244657	244657	244657	244657

Ordering Information

RAM Pump Packages with DataTrak

Package Number	247979	247980	247981
Ratio	14:1	63:1	68:1
RAM System	CM53BN	CM17BN	CM2RBN
3/4 in x 6 ft Air Hose	208610	208610	208610
1 in x 6 ft Fluid Hose	115042	244657	244657

RAM Pump Packages without DataTrak

Package Number	24E780	24E781	24E782
Ratio	14:1	63:1	68:1
RAM System	CM515N	CM155N	CM2L5N
3/4 in x 6 ft Air Hose	208610	208610	208610
1 in x 6 ft Fluid Hose	115042	244657	244657

Accessory Ordering Information

Seal Kit

	Part Number	Description
	25S071	Nitrile seal kit for 400 lb (180 kg) drums

Field-Proven, Energy-Efficient

Hydraulic Dyna-Star pumps provide reliable, quiet, ice-free performance at maximum pressure and low-flow rates and are up to three times more energy efficient than comparable compressed-air systems.

Built-In Reliability

Self-lubricating vertical design for long life and reliable operation in high-vibration environments.

Quiet Hydraulic Motor

No need for add-on mufflers.

High-Efficiency Motor

Uses less hydraulic oil.

Typical Applications

- Service shops
- Heavy-duty dealerships
- Fleet services facilities
- In-plant
- Lube trucks
- Mining

Typical Fluids Handled

- Grease up to NLGI #2

Technical Specifications

Fluid Pressure Ratio	5:1	10:1
Pump Number	224912 – 35 lb (16 kg) 224751 – 120 lb (55 kg) 224752 – 400 lb (180 kg)	247540 – 60 lb (27 kg) 247443 – 120 lb (55 kg) 247450 – 400 lb (180 kg)
Applications	Grease Dispensing	Grease Dispensing
Maximum Input Pressure	1,500 psi (102 bar)	600 psi (41 bar)
Maximum Fluid Input Volume	3 gpm (11.4 lpm)	3 gpm (11.4 lpm)
Maximum Output Flow Rate	4 lb/min (1.8 kg)	1.1 lb/min (0.5 kg)
Maximum Recommended CPM	60	60
Maximum Fluid Output Pressure	7,500 psi (517 bar)	7,500 psi (517 bar)
Hydraulic Supply Inlet	3/8 in NPT	3/4 to 16 in JIC (37º Flare)
Hydraulic Return Outlet	3/4 in NPT	3/4 in NPT
Fluid Outlet	1/2 in NPT	1/2 in NPT
Maximum Incoming Fluid Temp.	130°F (54°C)	200°F (93°C)
Wetted Parts	Steel, copper, polyurethane, Buna-N, polyester elastomer	Steel, copper, polyurethane, Buna-N, polyester elastomer
Sound Pressure Level	77 dB(A)	77 dB(A)
Approximate Weight	224912 – 32.5 lb (14.7 kg) 224751 – 37.5 lb (17 kg) 224752 – 42 lb (19.1 kg)	247540 – 41 lb (18.6 kg) 247443 – 43.5 lb (19.7 kg) 247450 – 48 lb (21.8 kg)
Instruction Manual	308156	312350

Ordering Information

Dyna-Star Hydraulic Pumps

Part Number	Description
224912	5:1 Grease pump for 35 lb (16 kg) pails
224751	5:1 Grease pump for 120 lb (55 kg) drum
224752	5:1 Grease pump for 400 lb (180 kg) drum
247450	10:1 Grease pump for 35 lb (16 kg) pails
247443	10:1 Grease pump for 120 lb (55 kg) drum
247450	10:1 Grease pump for 400 lb (180 kg) drum

Accessories

Drum Covers

Part Number	Description
224915	Cover for 35 lb (16 kg) pail
204574	Cover for 120 lb (55 kg) drum
200326	Cover for 400 lb (180 kg) drum

Follower Plates

Part Number	Description
224916	Follower plate for 35 lb (16 kg)
223700	Follower plate for 120 lb (55 kg)
223701	Follower plate for 400 lb (180 kg)

Hydraulic Fluid Controls

Required for each pump

Part Number	Description
236864	Dyna-Star Fluid Controls [1,500 psi (102 bar); 3 gpm (11.4 lpm)]. Includes manifold with pressure-reducing valve, flow control valve, pressure gauge, shut-off ball valves, and 3 ft (0.9 m) supply and return hoses. Instruction manual 308395.

Tie-Down Covers

Part Number	Description
222060*	Dyna-Star, 5:1 tie-down cover for 120 lb (55 kg)
207366**	Dyna-Star, 5:1 tie-down cover for 400 lb (180 kg)

*Use with hold-down kit 222061. **Use with hold-down kit 207361.

Field-Proven, Energy-Efficient

When paired with any of Graco's priming piston pumps, the Viscount II hydraulic motor offers exceptional cost savings by operating on 20% of the energy used by a pneumatic motor.

Built-In Reliability

Self-lubricating vertical design for long life and reliable operation in high-vibration environments.

Quiet Hydraulic Motor

No need for add-on mufflers.

High-Efficiency Motor

Uses less hydraulic oil.

Typical Applications

- Service shops
- Heavy-duty dealerships
- Fleet services facilities
- In-plant
- Lube trucks
- Mining

Typical Fluids Handled

- Grease up to NLGI #2

Technical Specifications

Fluid Pressure Ratio	2.4:1
Pump Number	222902 – 400 lb (180 kg)
Applications	Grease Dispensing
Maximum Input Pressure	1,500 psi (103.5 bar)
Maximum Fluid Input Volume	12 gpm (45.4 lpm)
Maximum Output Flow Rate	7.5 gpm (28.5 lpm)
Maximum Recommended CPM	60
Maximum Fluid Output Pressure	2,300 psi (159 bar)
Hydraulic Supply Inlet	3/4 in NPT
Hydraulic Return Outlet	1 in NPT
Fluid Outlet	1-1/2 in NPT
Maximum Incoming Fluid Temp.	130°F (54°C)
Wetted Parts	Carbon steel; chrome, zinc and electroless nickel plating; 304 and 17-4 PH grades of stainless steel; E52100 alloy steel; ductile iron; acetal; PTFE; ultra-high-molecular weight polyethylene
Sound Pressure Level	< 70 dB(A)
Approximate Weight	196 lb (89 kg)
Instruction Manual	308149

Ordering Information

Viscount II Pumps

Part Number	Description
222902	2.4:1 Grease Pump for 400 lb (180 kg) drum

Accessories

Hydraulic Fluid Controls

Required for each pump

	Part Number	Description
	236865	Viscount II Fluid Controls [1,500 psi (102 bar); 12 gpm (45.4 lpm)]. Includes manifold with pressure-reducing valve, flow control valve, pressure gauge, shut-off ball valves, and 3 ft (0.9 m) supply and return hoses. Instruction manual 308395.

Ordering Information

Manual Dispense from Bulk Containers

Package Number	225914*	225844*	112197**	112198**
Fluids Handled	Grease	Grease	Grease	Grease
Container Size	35 lb (16 kg)	35 lb (16 kg)	35 lb (16 kg)	120 lb (55 kg)
Pump Part Number	203702	203702	–	–
Dispense Kit	203703	203703	Filler Adapter***	Filler Adapter***
Booster Gun	203697	–	–	–
Cover and Follower Plate	203701	203701	–	–
Instruction Manual	306436	306436	306436	306436

* Delivers 1/4 oz (0.7 grams) of grease per stroke at pressures to 3,000 psi (207 bar). Can service fittings directly or be used to charge a booster gun for more efficiency at higher pressures.
** Fills all three-way loading grease guns equipped with filler fittings.
*** Dispense kit 203703 can be used for direct greasing applications (must be ordered separately).

Graco Dispense Valves and Guns Selection Guide

Grease Valves

	Fluid	Type	Maximum Working Pressure	Maximum Flow Rate	Intended Use	Warranty	Reference Pages
Accu-Shot™	NLGI #2	Metered	8,000 psi (552 bar)	2 lb/min 1 kg/min	Indoor/ Outdoor	1 year	159
Pro Shot™	Grease up to NLGI #2	Non-Metered	8,000 psi (552 bar)	2 lb/min 1 kg/min	Indoor/ Outdoor	1 year	160
Power Shot™	Grease up to NLGI #2	**Booster**	Supply 5,000 psi (345 bar) Output 18,000 psi (1,242 bar)	N/A	Indoor/ Outdoor	1 year	161

Grease Guns

	Fluid	Style	Maximum Working Pressure	Loading	Intended Use	Warranty	Reference Pages
Manual	Grease up to NLGI #2	Lever	6,000 psi to 10,000 psi (414 bar to 690 bar)	Cartridge/ bulk fill/ loader fill/ suction	Indoor/ Outdoor	1 year	162
Pneumatic	Grease up to NLGI #2	Pistol	6,000 psi (414 bar)	Bulk fill/ loader fill	Indoor/ Outdoor	1 year	162
Booster	Grease up to NLGI #2	Pistol	10,000 psi (690 bar)	Loader fill	Indoor/ Outdoor	1 year	162

Accu-Shot™ Metered Grease Valve

1 Year Warranty

For Heavy-Duty Applications

Designed to perform in heavy-equipment shops, fleet maintenance shops, municipal garages and higher-volume in-plant applications with longer plumbing runs and larger fluid usage.

Easy-to-Read LCD

Easily reset electronic display.

Accurate Grease Metering

± 3% accuracy with ± 1% repeatability.

Battery Powered

Utilizes two standard AA alkaline batteries.

Handles Pressure Up to 5,000 psi (345 bar)

Flow up to 36 oz/min (1 kg/min).

Technical Specifications

Maximum Working Pressure	5,000 psi (345 bar)
Metering System	Oval gears
Accuracy	± 3% with grease consistency (grade NLGI) 2/3
Repeatability (typical)	± 1% with grease consistency (grade NLGI) 2/3
Storage Temperature Range	-4°F to 158°F (-20°C to 170°C)
Operating Temperature Maximum	95 (%RU)
Battery	Standard alkaline batteries 2 x 1.5 Volt Size AA
Battery Life	18 to 24 months (depends on usage)
Dimensions (without extension)	8.8 in L x 1.8 in W x 4.4 H (22.4 cm L x 4.6 cm W x 11.2 cm H)
Weight	2.2 lb (1.0 kg)
Warranty	One year
Instruction Manual	309454

Typical Applications

- Fleet services facilities
- Heavy-duty dealerships
- In-plant
- Lube trucks
- Mining

Typical Fluids Handled

- Grease up to NLGI #2

Ordering Information

Part Number	Description	Includes
233807	U.S. measurement, includes extension and hydraulic coupler	Standard nozzle extension (200389) and 1/4 in NPT inlet
233933	Metric measurement, includes extension and hydraulic coupler	

Pro Shot™ Non-Metered Grease Valve

For Heavy-Duty Applications

Designed to perform in heavy-equipment shops, fleet maintenance shops, municipal garages and higher-volume in-plant applications with longer plumbing runs and larger fluid usage.

1 Year Warranty

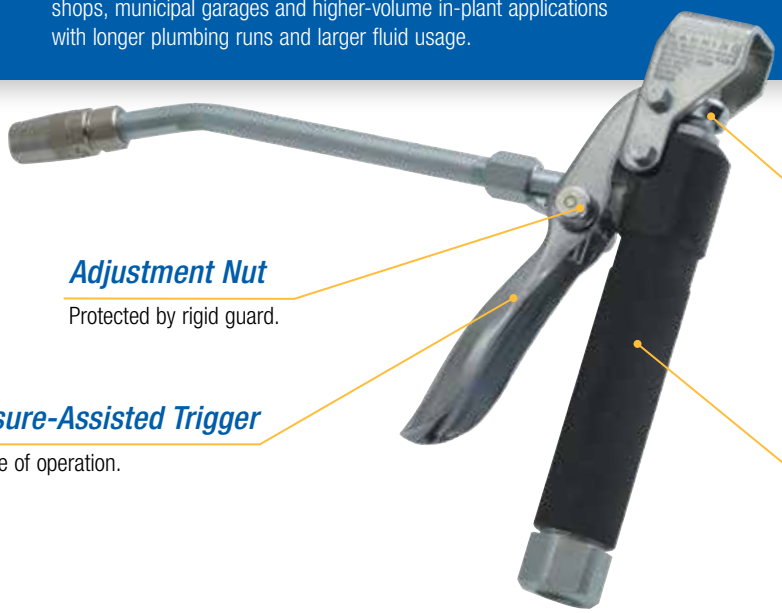

Adjustment Nut
Protected by rigid guard.

Pressure-Assisted Trigger
For ease of operation.

Easy Top Adjustment
With locking nut.

Rugged Design
For harsh environments.

Typical Applications

- Fleet services facilities
- Heavy-duty dealerships
- In-plant
- Lube trucks
- Mining

Typical Fluids Handled

- Grease up to NLGI #2

Technical Specifications

Maximum Working Pressure	8,000 psi (552 bar)
Inlet Size	1/4 in or 3/8 in
Wetted Parts	Chrome vanadium, polyurethane, brass, carbon steel, alloy steel
Warranty	One year
Instruction Manual	309032

Ordering Information

	Description	NPT	
		1/4 in	3/8 in
	Non-metered grease valve with standard nozzle extension (200389)	242056	242058
	Bare non-metered grease valve only	242055	242057
	Non-metered grease valve package. Includes Grease Valve (242056), Z-Swivel (202577) and Whip Hose (109148).	224872	–
	Non-metered grease valve package. Includes Grease Valve (242055), coupler (200325) and Whip Hose (109145).	26C184	–

For Heavy-Duty Applications

Designed to perform in heavy-equipment shops, fleet maintenance shops, municipal garages and higher-volume in-plant applications with longer plumbing runs and larger fluid usage.

1 Year Warranty

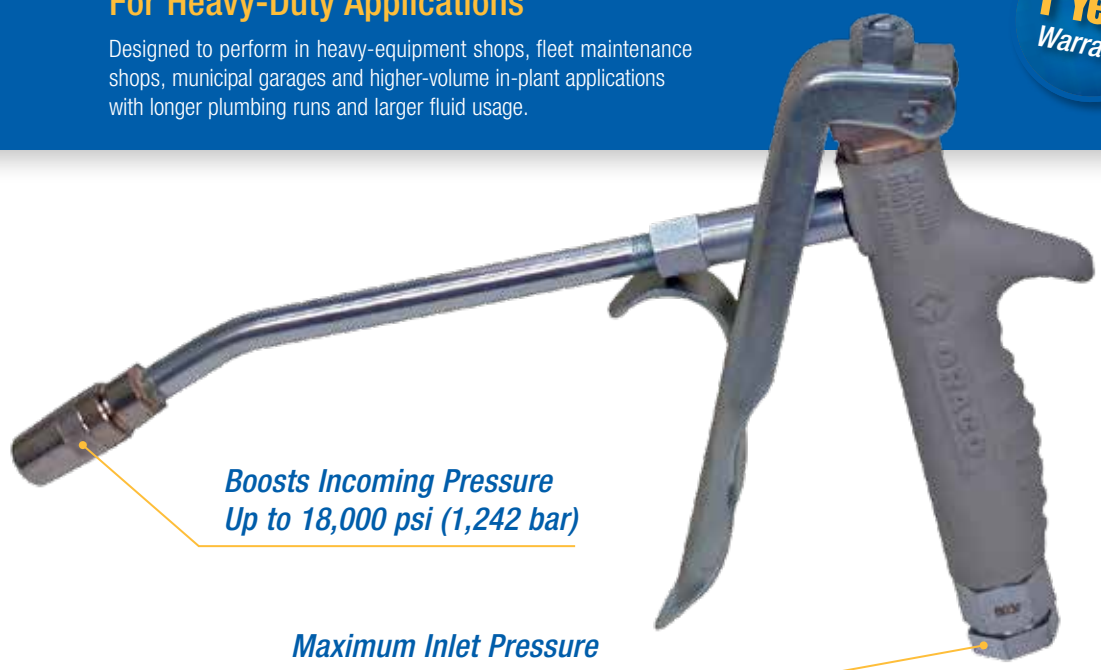

Boosts Incoming Pressure Up to 18,000 psi (1,242 bar)

Maximum Inlet Pressure of 5,000 psi (345 bar)

Typical Applications

- Fleet services facilities
- Heavy-duty dealerships
- In-plant
- Lube trucks
- Mining

Typical Fluids Handled

- Grease up to NLGI #2

Technical Specifications

Maximum Input Pressure	5,000 psi (34 MPa, 345 bar)
Maximum Delivery Pressure	Up to 18,000 psi (124 MPa, 1241 bar)
Inlet Size	1/8 NPT female
Wetted Parts	Alloy steel, carbon steel, chrome alloy, copper, leather
Weight	3 lb (1.4 kg)
Height	7 in (178 mm)
Length	11.675 in (296 mm)
Warranty	One year
Instruction Manual	306271

Ordering Information

Part Number	Description
202600	1/8 NPT(F) Power Shot booster Valve. Includes nozzle (200389)

Accessories

Part Number	Description
202579	Hose swivel (must be ordered separately)

Grease

1 Year Warranty

Lever-Action and Pistol-Style Grease Dispensing Guns

Durable design for years of trouble-free use in demanding environments. Reduces downtime and is easy to load – two- or three-way loading capability makes it easy to keep on greasing.

Comfortable Pistol-Style Grip

Allows for easy, one-handed operation.

Bulk Loader Valve

Allows loading from bulk container pumps.

Optional Pneumatic Operation

Works faster, reduces fatigue and is easier to use in cold conditions.

Heavy-Duty Cast Head and Cartridge Body

Designed for reliability and long life.

Ordering Information

	Part Number	Style	Gun Type	Pressure psi (bar)	Loading	Includes
	112196	Pneumatic	Pistol	6,000 (414)	Bulk fill/ loader fill	Rigid extension and hydraulic coupler
	203697	Booster	Pistol	10,000 (690)	Loader fill	Rigid extension
	110218	Manual	Lever	6,000 (414)	Cartridge/bulk fill	Rigid extension and hydraulic coupler
	110216			10,000 (690)	Cartridge/ bulk fill/ loader fill	Rigid extension, hydraulic coupler and air bleeder valve
	110203		Pistol			Rigid extension, hydraulic coupler and air bleeder valve
	110202					12 in (30.4 cm) flexible extension, hydraulic coupler and air bleeder valve
	110201		Suction	–	Suction	12 in (30.4 cm) clear plastic hose

Accessories

Part Number	Description
109145	12 in (30.4 cm) clear plastic hose without coupler
112255	18 in (45.8 cm) clear plastic hose without coupler

Ordering Information

Z-Swivels

Maximum Working Pressure psi (bar)	Inlet	Outlet	Thread	Part Number
6,500 (450)	1/8 in	1/4 in	NPT	202579
6,500 (450)	1/4 in	1/4 in	NPT	202577
6,500 (450)	3/8 in	3/8 in	NPT	224569
6,000 (414)	1/2 in	1/2 in	NPT	207948

Straight Swivels

Maximum Working Pressure psi (bar)	NPT		Part Number
	Inlet	Outlet	
8,000 (500)	1/8 in	1/8 in	204082
8,000 (500)	1/4 in	1/8 in	204083
8,000 (500)	1/4 in	1/4 in	204084
6,000 (414)	1/2 in	1/2 in	207947
5,000 (345)	3/8 in	1/2 in	214926
5,000 (345)	1/2 in	1/2 in	207946

360° Swivels

Part Number	Includes	
	Fitting	Coupler
203597	203198	200325
203198	203198	–

Nozzles

Part Number	Description
200389	Standard nozzle. Includes straight 6 in (15.2 cm), 1/8 NPT(M) extension tube (197471) and tapered nose coupler (200325).
204072	Swivel nozzle. Includes straight 6 in (15.2 cm), 1/8 NPT(M) extension tube (197471) and tapered nose coupler (200325). Coupler has 360° swivel adapter (203198) for added convenience.
204897	Swivel nozzle. Includes straight 12 in (30.4 cm), 1/8 NPT(M) extension tube (155836) and tapered nose coupler (200325). Coupler has 360° swivel adapter (203198) for added convenience.
204204*	Flexible 12 in (30.4 cm) hose nozzle. 1/8 NPT(M) includes tapered-nose coupler (200325).
203504*	Flexible 12 in (30.4 cm) hose nozzle. 1/8 NPT(M) includes tapered-nose coupler (200325) and lock-sleeve connector (203497) for quick connection to any grease nozzle having tapered-nose coupler.
109145	12 in (30.4 cm) hose nozzle without coupler.
112255	18 in (45.8 cm) hose nozzle without coupler.
109148*	30 in (76.2 cm) hose nozzle without coupler, has 1/8 NPT(M) both ends. Use as alternate for rigid nozzle with tapered-nose coupler 200325.

200389

204072

Ordering Information

Couplers

Part Number	Description
200325	1/8 NPT(F) inlet standard tapered-nose coupler. Hardened jaws grip grease fittings through wide-sealing angle, but release easily. Maximum working pressure 8,000 psi (551 bar).
202650	1/8 NPT(F) inlet standard straight-nose grease coupler for manual operated grease guns only. Maximum working pressure 3,000 psi (206 bar).
200020	1/8 NPT(F) inlet standard button-head coupler. Gives fast, positive seal on button-head fittings.
200021	1/8 NPT(F) inlet giant button-head coupler. Gives fast, positive seal on larger button-head fittings.

200325

200020

Adapters

Adapters have lock-sleeve quick-connector; works with any grease nozzle with a tapered-nose coupler.

Part Number	Description
201881	Hydraulic-to-push adapter. Used for U-joints and low-pressure service.
205532	Hydraulic-to-steel needle adapter. Used for flush fittings. 250 psi (17 bar) max. Not for air grease applications or guns.
205582	Hydraulic-to-nylon needle adapter. Used for removable plugs. 250 psi (17 bar) max. Not for air grease applications or guns.
223187	90° hydraulic-to-push adapter (K-car). Refer to instruction manual 306708.
203497	Lock-sleeve connector. 1/8 NPT(F) outlet. Allows for quick connection to tapered-nose coupler. Inlet is standard grease fitting with sleeve to lock connector in place.
236171	Easy-fill valve. For faster loading of Graco hand grease guns with gun loaders. Replaces hydraulic fittings on all grease guns with 1/8 NPT(F).
204929	Grease loader valve. For use with lever-operated, high-volume grease pumps. Permits quick bulk filling of hand-operated grease lever guns equipped with easy-fill valve 236171.
205592	Hydraulic adapter assortment package. Contains needle adapter (205568), plug adapter (205554), push adapter (201881), nylon needle adapter (205582), hydraulic-to-steel needle adapter (205532) and whip hose nozzle connector (203504).

205532

205582

203497

205592

Tapered Thread Grease Fittings, 10,000 psi (690 bar) (steel; ball check)

Part Number	Shank	Description
100054	9/32	1/8 NPT straight
101277	1-9/32	1/8 NPT straight
100970	9/32	1/8 NPT 30° angle
100834	9/32	1/8 NPT 45° angle
100971	9/32	1/8 NPT 65° angle
100833	9/32	1/8 NPT 90° angle
100848	3/8	1/4 NPT 67° angle
100846	3/16	1/4-28 tapered SAE-LT straight
100847	13/64	1/4-28 tapered SAE-LT 45° angle
101283	3/16	1/4-28 tapered SAE-LT 90° angle
101281	11/32	1/4-28 tapered SAE-LT straight
110702	19/64	1/4-28 tapered SAE-LT 65° angle
100835	12/32	1/4 NPT straight

100054

100970

100834

100833

100848

Ordering Information

1/4 in Tapered Thread-Forming Grease Fittings, 10,000 psi (690 bar) (steel; ball check)

Part Number	Shank	Description
110703	13/64	1/4-28 straight
110705	13/64	1/4-28 90° angle

Drive-Type Grease Fittings (steel)

Part Number	Shank	Description
110706	3/32	3/16 drill straight
110709	7/32	3/16 drill 65° angle
110713	1/4	3/16 drill straight without ball check
101312	7/32	3/16 drill straight with ball check
110710	1/4	5/16 drill straight with ball check
101287	17/64	1/4 drill straight without ball check

101287

Standard Button-Head Grease Fitting (steel)

1/4 in Tapered Thread Grease Fittings (steel; ball check)

Part Number	Shank	Description
100837	7/16	1/4 NPT straight
101297	33/64	3/8 NPT straight
110711	35/64	1/2 NPT straight

101297

Giant Button-Head Grease Fitting (steel)

Part Number	Shank	Description
110712	9/16	3/8 NPT straight
100854	1/2	1/4 NPT straight

110712

Easy-Outs

Part Number	Description
101604	3/8 NPT straight
101605	1/4 NPT straight

101604

Grease Accessory Packages

Convenient storage box contains the following threaded fittings in the quantities listed:

Part Number	Package Includes			
	Quantity	Grease Fitting No.	Shank	Description
202654	30	100054	9/32	1/8 NPT straight
	10	100970	9/32	1/8 NPT 30° angle
	10	100833	9/32	1/8 NPT 90° angle
	20	100846	3/16	1/4-28 straight
	10	100847	13/64	1/4-28 45° angle

202654

Notes

DIESEL EXHAUST FLUID (DEF) SYSTEMS

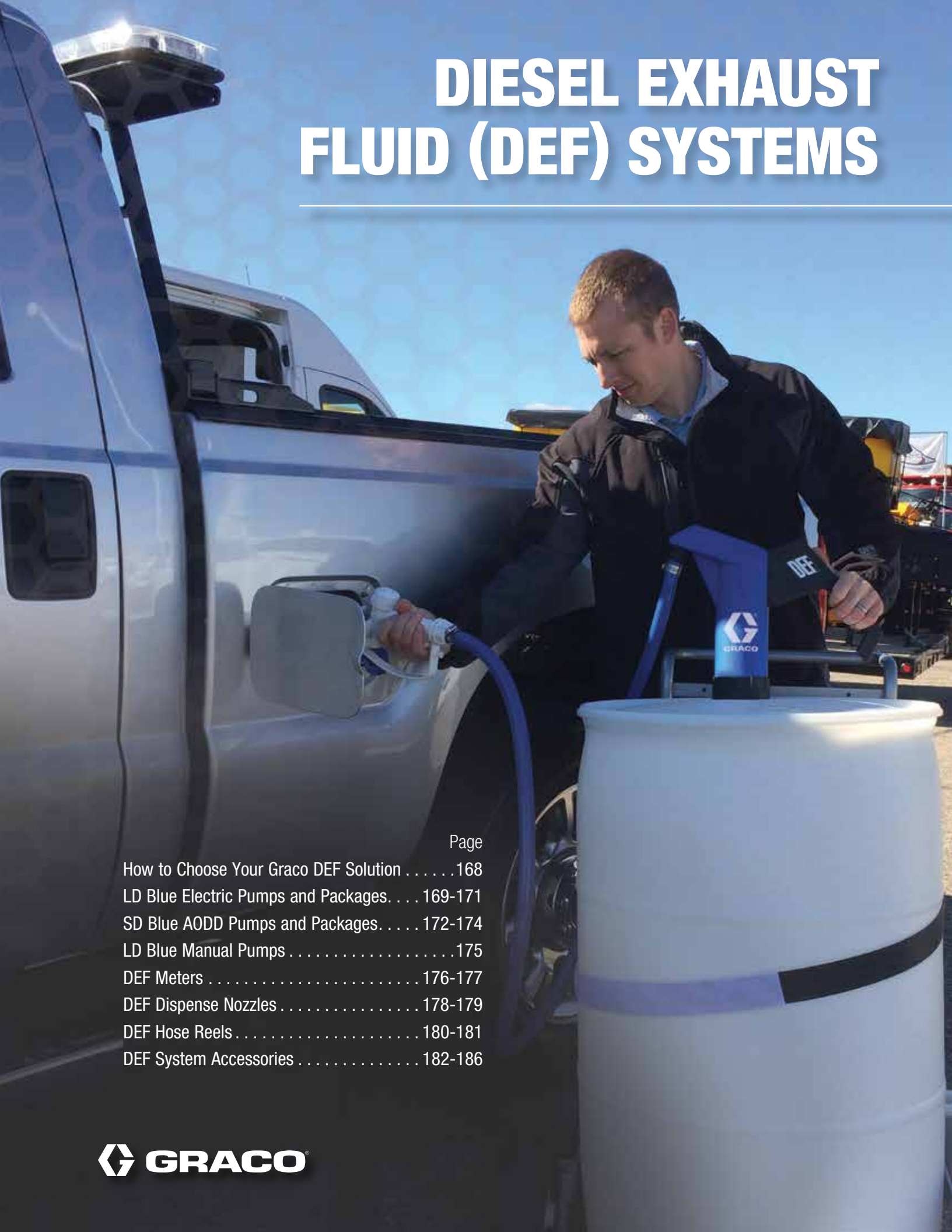

Page

How to Choose Your Graco DEF Solution 168
LD Blue Electric Pumps and Packages. . . . 169-171
SD Blue AODD Pumps and Packages. 172-174
LD Blue Manual Pumps 175
DEF Meters 176-177
DEF Dispense Nozzles 178-179
DEF Hose Reels 180-181
DEF System Accessories 182-186

GRACO

Flexible Installation – Solutions for Every Application

Choose from configured packages or build a custom DEF system specific to your application with individual pumps and components. From the economical hand pumps to the high-performance electric or air-operated double diaphragm (AODD) packages, Graco has you covered. Every solution is designed with the highest-quality components for trouble-free operation.

Tote Mount

Drum Mount

Wall Mount

How to Choose Your Graco DEF Solution:

A Identify your power supply

Choose the pump that's right for your application. Choose the lightweight and reliable manual hand pump for small applications. The LD Blue electric pumps are recommended for applications up to 50 ft, or upgrade to the SD Blue AODD pump for longer applications, up to 200 ft.

B Determine your container size*

Whether dispensing from a drum or a tote container, Graco has the package that fits your needs. Fifty-five gallon drums are ideal for one or two truck operations, and for larger fleets choose 275 or 330 gallon IBC totes.

*Tote and drum not for sale from Graco

C Choose your accessories

Graco offers a full line of high-quality DEF accessories to complement your installation. Select from automatic or manual dispense nozzles, closed-system couplers, in-line meters, hose reels, mounting brackets, fittings, and dispense and suction hoses.

A Reliable Industrial Pump with Self-Priming Capabilities

Whether you own a small garage, large dealership or heavy equipment maintenance facility, Graco has a complete line of diesel exhaust fluid (DEF) products for every application. Our electric, pneumatic or manual products are engineered specifically for the advanced needs of DEF fluid and are designed to minimize downtime and dispense materials quickly without compromising chemical integrity.

2 Year Warranty!

Built-In Safety and Reliability

Automatic shut-off timer (6.5 min) incorporated into the 120V pump. Prevents the pump from running past the duty cycle and maximizes the life of the pump.

Stay Up and Running Longer

Reduce downtime and get more work done with the LD Blue systems – up to twice the life of competitive pumps.

Reduced Maintenance

Features a self-priming membrane pump that has no need for a dynamic seal, reducing the need for maintenance.

Typical Applications

- Automotive and heavy-duty dealerships
- Agriculture
- Service and fast lube centers
- Fleet service facilities

Typical Fluids Handled

- Diesel exhaust fluid

Technical Specifications

	120V	12V
Maximum Flow Rate	9 gpm	9.5 gpm
Maximum Fluid Pressure	50 psi	50 psi
RPM	1,750	2,600
Watts	500	260
Voltage	120V / 60hz	12V
Maximum Amperage	4.5A	22A
Duty Cycle	20 min ON/OFF	20 min ON/OFF
Listings	CRU US	CE

Ordering Information

Pump Only

Part Number	Description
127642	120V AC electric pump, 3/4 in barbed hose tail
127643	12V DC electric pump, 3/4 in barbed hose tail

Ordering Information

LD Blue Electric Pump Packages

Package Number	26C172	26C175	26C173	26C174
Mount Type	Tote	Tote	Tote	Tote
Voltage	12 VDC	120 VAC	12 VDC	120 VAC
Type of Nozzle	Automatic	Automatic	Automatic	Automatic
Nozzle	127655	127655	127655	127655
Pump	127643	127642	127643	127642
Bracket	Stainless steel	Stainless steel	Stainless steel	Stainless steel
Meter	127873	127873	–	–
1 in Elbow Fitting	127656	127656	–	–
Dispense Hose	127680	127680	127680	127680
Dispense Hose Length	20 ft	20 ft	20 ft	20 ft
Suction Hose	127679	127679	127679	127679
Suction Hose Length	5 ft	5 ft	5 ft	2 ft
Fittings (2)	SST clamps	SST clamps	SST clamps	SST clamps

Ordering Information

LD Blue Electric Pump Packages

Package Number	24V641	24V644	24V645	24V656	24V646
Mount Type	Tote	Tote	Tote	Drum	Tote
Voltage	120V	120V	120V	120V	12V
Type of Nozzle	Automatic	Manual	Automatic	Automatic	Automatic
Nozzle	127649	125078	127649	127649	127649
Pump	127642	127642	127642	127642	127643
Bracket	Stainless steel	Stainless steel	Stainless steel	Stainless steel	Stainless steel
Meter	127663	–	–	–	127663
1 in Elbow Fitting	127656	–	–	–	127656
Dispense Hose	24W161	24W161	24W161	24W161	24W161
Dispense Hose Length	20 ft	20 ft	20 ft	20 ft	20 ft
Suction Hose Length	5 ft	5 ft	5 ft	5 ft	5 ft
Fittings (2)	SST clamps	SST clamps	SST clamps	SST clamps	SST clamps

Package 24V646 installed on tote (not included in package).

Package 24V656 installed on 55 gallon drum (not included in package).

SD Blue Husky 515 Pump

Diesel Exhaust Fluid (DEF)

Superior-Performing AODD Pump Capable of Higher Output Over Longer Runs

Whether for a small garage, large dealership or heavy equipment maintenance facility, our pneumatic pumps are engineered specifically for the advanced needs of DE fluid and are designed to minimize downtime and dispense materials quickly without compromising chemical integrity.

5 Year Warranty!

Modular Air Valve

Stall-free, low-pulsation air valve provides smooth and rapid changeover for increased efficiency and minimizes downtime.

Robust Design

Bolt-through fluid cover design eliminates leaks and provides better safety and more reliability.

Versatility

The Husky 515 pump delivers up to 15 gpm and works on as little as 30 psi.

Rugged Construction

Resists corrosion for reliable performance and long life.

Typical Applications

- Automotive and heavy-duty dealerships
- Mining
- Service and fast lube centers
- Fleet service facilities
- In-plant
- Lube trucks

Typical Fluids Handled

- Diesel exhaust fluid

Technical Specifications

Maximum Flow Rate	15 gpm
Maximum Fluid Pressure	50 psi
Air Operating Range	30-50 psi
Air Inlet	1/4 in NPT(F)
Pump Inlet	3/4 in BSPP(F)
Hose Inlet	3/4 in BSPP(F)
Pump Outlet	3/4 in BSPP(F)
Maximum Air Consumption	28 scfm

Ordering Information

Part Number	Description	Inlet/Outlet
24G745	SD Blue Husky 515 pump	3/4 in BSPP

Ordering Information

SD Blue Pump Tote Packages

	Deluxe		Standard	
Package Number	24F531	24F878	24V677	24V678
Mount Type	Tote/Wall	Tote/Wall	Tote/Wall	Tote/Wall
Type of Nozzle	Automatic	Automatic	Automatic	Automatic
Air-Operated Pump	24G745	24G745	24G745	24G745
Mounting Bracket	24F870	24F870	24W186	24W186
Valve/Nozzle	24F529	24F529	127649	127649
Meter	24G738	–	127663	–
Drum Quick Connect Kit	24F532	24F532	–	–
Air Regulator and Gauge	110147	110147	–	–
Air Shut-Off Ball Valve, Vented	110223	110223	–	–
50 psi Air Safety Valve	124963	124963	116306	116306
Dispense Hose	124603	124603	24W161	24W161
Dispense Hose Length	20 ft	20 ft	20 ft	20 ft
Suction Hose	124581	124581	24W149	24W149
Suction Hose Length	6 ft	6 ft	5 ft	5 ft
Fittings (2)	3/4 in BSPP(MBE)	3/4 in BSPP(MBE)	SST Clamps	SST Clamps

Package 24V677 installed on a 275 gallon tote (tote and coupler not included in package).

SD Blue Pump Packages

Ordering Information

SD Blue Pump Drum Packages

	Deluxe		Standard	
Package Number	24F947	24M499	24V679	24V686
Mount Type	Drum	Drum	Drum	Drum
Type of Nozzle	Manual	Automatic	Manual	Automatic
Air-Operated Pump	24G745	24G745	24G745	24G745
Mounting Bracket	24F679	24F679	24W185	24W185
Valve/Nozzle	125078	24F529	125078	127649
Meter	–	24H293	–	127663
Drum Quick Connect Kit	24F532	24F532	–	–
Air Regulator and Gauge	110147	110147	–	–
Air Shut-Off Ball Valve, Vented	110223	110223	–	–
50 psi Air Safety Valve	124963	124963	116306	116306
Dispense Hose	125079	124671	24W154	24W154
Dispense Hose Length	12 ft	12 ft	12 ft	12 ft
Suction Hose	124875	124875	24W148	24W148
Suction Hose Length	2 ft	2 ft	2 ft	2 ft
Fittings (2)	3/4 in BSPP(M)	3/4 in BSPP(M)	SST Clamps	SST Clamps

Package 24V686 installed on 55 gallon drum (not included in package).

LD Blue Manual Pumps

Features and Benefits

- Lightweight, reliable and cost-effective solution for dispensing DEF from 55 gallon drums
- Quick drum installation and change-out with integrated 2 inch bung adapter
- Fast delivery capable of 11 oz per stroke
- Adjustable telescoping downtube

Typical Applications

- Automotive and heavy-duty dealerships
- Agriculture
- Service and fast lube centers
- Fleet service facilities
- In-plant

Typical Fluids Handled

- Diesel exhaust fluid

Technical Specifications

Maximum Flow Rate	11 oz per stroke

Ordering Information

Part Number	Description
127647	DEF hand pump with drum-length adjustable downtube (125479)
24G636	DEF hand pump (127647), 6 ft dispense hose with ball valve (125478), drum length adjustable downtube (125479)
127875	DEF hand pump (127647), 6 ft dispense hose with ball valve (125478), drum length adjustable downtube (125479), LD manual nozzle (125078)

Accessories

Part Number	Description
125479	Drum length adjustable downtube for hand pump
125478	6 ft dispense hose with ball valve

SDI15 In-Line Meter

Features and Benefits

- Tracks totals in two modes – reset for periodic history and non-reset for meter life
- Durable design for rugged use
- Easy to use – dispenses pints, quarts, liters or gallons
- 0.5 gpm to 15 gpm flow rate
- 1500 psi maximum pressure, 1/2 in NPT inlet

Technical Specifications

Flow Range	0.5 gpm to 15 gpm (1.9 lpm to 57 lpm)
Maximum Working Pressure	1,500 psi (103 bar)
Units of Measure	Quarts, pints, gallons, liters (factory-set to quarts)
Weight	1.8 lb (0.8 kg)
Accuracy	± 2.5%
Inlet/Outlet	1/2 in BSPP
Maximum Totalizer	99,999
Maximum Recorded Dispense	999.99
Operating Temperature Range	-4°F to 122°F (-20°C to 50°C)
Storage Temperature Range	-13°F to 122°F (-25°C to 50°C)
Outdoor Use	No
Battery	2 AA alkaline
Wetted Parts	Stainless steel, PBT (polybutylene terephthalate), nickel, fluoroelastomer
Meter Pressure Loss	22 psi (1.5 bar) @ 14 gpm (53 lpm)
Instruction Manual	313048

Typical Applications

- Automotive and heavy-duty dealerships
- Mining
- Service and fast lube centers
- Fleet service facilities
- In-plant
- Lube trucks

Typical Fluids Handled

- Diesel exhaust fluid

Ordering Information

Part Number	Description
24G738	SDI15 DEF meter, 1/2 in BSPP(F/F), 1,500 psi, 0.5 to 15 gpm
24H293	SDI15 meter kit with fittings for SST auto nozzle. Includes SDI15 Meter (24G738), Swivel (124964), Nipple Fitting (24H292), Adapter Fitting (16G760) and Elastomeric Seal (124965).

LD Blue In-Line Meter

Features and Benefits

- Easy to install – use in-line or at the end of the dispense hose
- Impulse signals – single channel or reed switch
- 1.3 gpm to 26.4 gpm flow rate
- Rotatable display – 4 positions
- 1 in BSPP(M) inlet and outlet. Includes 1 in BSPP(F) coupler.

Technical Specifications

Flow Range	1.3 gpm to 26.4 gpm (4.9 lpm to 100 lpm)
Maximum Working Pressure	145 psi (10 bar)
Units of Measure	Quarts, pints, gallons, liters (factory-set to quarts)
Weight	0.6 lb (0.25 kg)
Accuracy	± 1.0%
Inlet/Outlet	1 in BSPP(M)
Maximum Totalizer	99,999
Maximum Recorded Dispense	999.99
Operating Temperature Range	14°F to 122°F (-10°C to 50°C)
Storage Temperature Range	-4°F to 158°F (-20°C to 70°C)
Outdoor Use	No
Battery	2AAA alkaline
Wetted Parts	SST, plastic, rubber
Meter Pressure Loss	5 psi (0.3 bar) @ 26.4 gpm (100 lpm)
Instruction Manual	333467

Typical Applications

- Automotive and heavy-duty dealerships
- Service and fast lube centers
- Fleet service facilities
- In-plant

Typical Fluids Handled

- Diesel exhaust fluid

Ordering Information

Part Number	Description
127663	LD digital in-line turbine meter, LCD display

Accessories

Part Number	Description
127800	Adapter – SD auto nozzle connection to LD meter

LD Blue Automatic Nozzles

Diesel Exhaust Fluid (DEF)

2 Year Warranty!

Features and Benefits

- Easy break-away system for low-cost repairs if the spout becomes detached
- Choose with or without built-in meter
- 4 gpm to12 gpm flow rate
- 50 psi maximum pressure
- Optional mis-filling system to prevent mis-fills
- Stainless steel spout

Typical Applications

- Automotive and heavy-duty dealerships
- Service and fast lube centers
- Fleet service facilities
- In-plant

Typical Fluids Handled

- Diesel exhaust fluid

Technical Specifications

	Automatic Shut-Off Nozzle	Automatic Shut-Off Nozzle with Meter
Flow Range	4 gpm to 12 gpm (15 lpm to 45 lpm)	4 gpm to 12 gpm (15 lpm to 45 lpm)
Maximum Working Pressure	50 psi (3.5 bar)	50 psi (3.5 bar)
Units of Measure	–	Quarts, pints, gallons, liters (factory-set to quarts)
Weight	1.3 lb (0.6 kg)	1.8 lb (0.8 kg)
Accuracy	–	± 1%
Inlet	1 in BSP or 3/4 in hose barb	1 in BSP or 3/4 in hose barb
Maximum Totalizer	–	999,999
Maximum Recorded Dispense	–	99,999
Operating Temperature Range	-4°F to 130°F (-20°C to 55°C)	14°F to 122°F (-10°C to 50°C)
Storage Temperature Range	-40°F to 140°F (-40°C to 60°C)	-4°F to 158°F (-20°C to 70°C)
Outdoor Use	Yes	No
Battery	–	2AA alkaline
Wetted Parts	SST, rubber, plastic	SST, rubber, plastic
Meter Pressure Loss	13 psi (0.9 bar) @ 9.3 gpm (35 lpm)	13 psi (0.9 bar) @ 9.3 gpm (35 lpm)
Instruction Manual	333468	333469

Ordering Information

Part Number	Description
127649	LD automatic nozzle with stainless steel breakaway spout
127650	LD automatic nozzle with built-in electronic turbine meter, with stainless steel breakaway spout

Accessories

	Part Number	Description
	127651	Spout replacement kit for LD nozzles 127649 and 127650
	127652	Magnetic mis-fill spout kit for LD automatic nozzles
	127654	Magnetic adapter for mis-fill kit

SD Blue Nozzle

Features and Benefits

- Heavy-duty design
- Automatic shut-off valve with stainless steel nozzle
- 11 gpm flow rate
- 50 psi maximum pressure
- 3/4 in BSPP inlet

Typical Applications

- Automotive and heavy-duty dealerships
- Mining
- Service and fast lube centers
- Fleet service facilities
- In-plant
- Lube trucks

Typical Fluids Handled

- Diesel exhaust fluid

Ordering Information

Part Number	Description
124398	SD automatic shut-off SST nozzle without swivel, 3/4 in BSPP(F)
24F529	SD automatic shut-off SST nozzle with swivel, 3/4 in BSPP(F)
127655	SD automatic shut-off SST nozzle, 3/4 in hose barb

LD Blue Manual Nozzle

Typical Applications

- Automotive and heavy-duty dealerships
- Service and fast lube centers
- Fleet service facilities
- In-plant

Typical Fluids Handled

- Diesel exhaust fluid

Features and Benefits

- Manual shut-off valve with stainless steel nozzle
- High 20 gpm flow rate
- 50 psi maximum pressure
- 3/4 in BSPP inlet
- Lightweight – under 1 lb

Ordering Information

Part Number	Description
125078	LD manual DEF nozzle with SST spout

LDX DEF Hose Reels

Features and Benefits

- For use with SD and LD pumps (LD pump with manual nozzle only)
- Stainless steel fluid section with open porting ensures high fluid flow with minimal pressure loss
- Flexible positioning of guide arm for mounting on bench, overhead, wall, tote or utility truck
- 150 psi maximum pressure
- 1/2 in x 45 ft inlet hose with 1/2 in BSPT(M) swivel connection to provide leak-free connection

Typical Applications

- Small maintenance shops
- Tire maintenance shops
- Small fast lubes
- Independent repair facilities
- Industrial manufacturing facilities

Typical Fluids Handled

- Diesel exhaust fluid

Technical Specifications

Operating Temperature Range	-40°F to 158°F (-40°C to 70°C)
Wetted Parts	Hybrid polymer, brass, nitrile rubber
Sound Pressure Level	80 dB(A)
Sound Power Level	87 dB(A)
Instruction Manual	3A8216

Ordering Information

Hose Reels

Part Number	Description
HEL015	LDX Series, DEF, 1/2 in (13 mm) inlet, 1/2 in x 45 ft (13 mm x 14 m) hose, BSPT

Accessories

Part Number	Description
25U370	Inlet kit
18F444	1/2 in BSPT to 3/4 in hose barb adapter
18F445	1/2 in to 3/4 in adapter, BSPT

XD 30 DEF Hose Reels

Features and Benefits

- For use with SD and LD pumps (LD pump with manual nozzle only)
- Stainless steel fluid section with open porting ensures high fluid flow with minimal pressure loss
- Flexible positioning of guide arm for mounting on bench, overhead, wall, tote or utility truck
- 50 psi maximum pressure
- 3/4 in x 50 ft inlet hose with 3/4 in BSPP(M) swivel connection to provide leak-free connection

Typical Applications

- Automotive and heavy-duty dealerships
- Mining
- Service and fast lube centers
- Fleet service facilities
- In-plant
- Lube trucks

Typical Fluids Handled

- Diesel exhaust fluid

Technical Specifications

Operating Temperature Range	12°F to 140°F (-11°C to 60°C)
Maximum Working Pressure	50 psi (3.5 bar)
Wetted Parts (Bare Reel Only)	Zinc plated steel, polyurethane, steel
Weight (Without hose)	98 lb (44.5 kg)
Sound Pressure Level	85.8 dB (A)
Sound Power Level	94.9 dB (A)
Instruction Manual	3A1767

Ordering Information

Hose Reels

Part Number	Description
HSDD5A	XD 30 DEF hose reel, 3/4 in x 50 ft, white, BSPP
HSDD5B	XD 30 DEF hose reel, 3/4 in x 50 ft, blue, BSPP
HSDD5F	XD 30 DEF hose reel, 3/4 in x 50 ft, yellow, BSPP
HSDDDA	XD 30 DEF hose reel, bare, white, BSPP
HSDDDB	XD 30 DEF hose reel, bare, blue, BSPP
HSDDDF	XD 30 DEF hose reel, bare, yellow, BSPP

Hose Reel Inlet Kits

A hose inlet kit is required when ordering an XD reel.

Part Number	Description
24W250	2 ft DEF inlet hose kit for XD 30 reels. 3/4 in BSPP(F) x cut end and 90º elbow.
24W251	6 ft DEF inlet hose kit for XD 30 reels. 3/4 in BSPP(F) x cut end and 90º elbow.
124875	2 ft DEF hose, 3/4 in BSPP(M) x cut end (inlet hose)
124581	6 ft DEF hose, 3/4 in BSPP(M) x cut end (inlet hose)

Ordering Information

Mounting Brackets

Part Number	Description
24F870	AODD tote/wall mounting bracket with nozzle holder
24F679	AODD drum mounting bracket with nozzle holder
124541	AODD nozzle bath holder

Dispense and Suction Hoses

	Part Number	Description
Standard	24W148	2 ft suction hose kit with (2) hose clamps
	24W149	5 ft suction hose kit with (2) hose clamps
	24W190	6 ft dispense hose kit with (2) hose clamps
	24W154	12 ft dispense hose kit with (2) hose clamps
	24W161	20 ft dispense hose kit with (2) hose clamps
Deluxe	124875	2 ft suction hose, 3/4 in BSPP(M) x cut end (inlet hose)
	124581	6 ft suction hose, 3/4 in BSPP(M) x cut end (inlet hose)
	124671	12 ft dispense hose, 3/4 in BSPP x 3/4 in BSPP
	125079	12 ft dispense hose, 3/4 in BSPP x cut end
	124603	20 ft dispense hose, 3/4 in BSPP x 3/4 in BSPP
	125074	20 ft dispense hose, 3/4 in BSPP x cut end
	125242	50 ft dispense hose, 3/4 in BSPP x 3/4 in BSPP

Pump Handle

Part Number	Description
127646	Black handle for 12V DC pump

Ordering Information

Fittings

	Part Number	Description
	127656	1 in BSP(F) elbow fitting, black
	127657	1 in BSP(F) x 3/4 in barb hose tail, black
	127720	1 in BSP(F) x 1 in BSP(F) linear socket, black
	127804	3/4 in x 1 in BSPP(F) swivel fitting with seals
	127805	1 in BSPP(F) x 1 in BSPP(F) coupler
	127806	1 in BSPP(M/F) swivel, white
	127815	3/4 in BSP x 3/4 in barb SST swivel hose tail
	127823	1 in BSP x 3/4 in barb elbow, white
	116306	1/4 in NPT, 50 psi air safety valve for Standard AODD pump packages
	124963	1/8 in NPT, 50 psi air safety valve for Deluxe AODD pump packages
	24F524	3/4 in BSPP(M) x 3/4 in BSPP(F) SST swivel

Closed-System Coupler Accessories

Ordering Information

Maintaining fluid purity is essential to the longevity of your equipment and maintaining selective catalytic reduction (SCR) engines. With a closed-system design you can minimize fluid contamination and prevent spills. Choose from a variety of industry-accepted closed-system inlet kits to best suit your needs.

Colder

DrumQuick® PRO Quick Connect Coupler System. Economical polypropylene assembly can withstand thousands of quick and fast connections.

	Part Number	Description
	24F532	Colder closed-system coupler kit – includes drum coupler (124548), drum insert (124549) and downtube (124550)
	124548	Colder closed-system drum coupler
	124549	Colder closed-system drum insert
	125014	Colder closed-system drum insert with buttress thread
	124550	Colder closed-system 47 in downtube

DrumQuick® is a registered trademark of Colder Products Company.

Ordering Information

Micro Matic

Reusable Stainless Valve (RSV) is ideal for multi-use applications and is simple to integrate with drums, totes and custom packages.

Economic Plastic Valve (EPV™) is designed for one-way, single-use applications. Engineered for use when operations require the container package to be used once, emptied and recycled.

	Part Number	Description
	17C907	Micro Matic EPV dispense coupler, 3A orange, 3/4 in barbed outlet, EPDM seals
	127634	Micro Matic EPV container valve, 3A orange, 2.5 in x 5 buttress, EPDM Seals
	127793	Micro Matic EPV downtube for 55 gal drum
	127794	Micro Matic EPV center downtube for 275 gal IBC tote
	127635	Micro Matic EPV center downtube for 330 gal IBC tote
	17C908	Micro Matic RSV dispense coupler, 3/4 in barbed outlet, 4 pin, stainless steel
	127637	Micro Matic RSV container valve, 2.5 in x 5 in, 4 cam, stainless steel valve, EPDM seals
	127795	Micro Matic RSV downtube for 55 gal drum
	127796	Micro Matic RSV center downtube for 275 gal IBC tote
	127639	Micro Matic RSV center downtube for 330 gal IBC tote
	127640	Micro Matic RSV fill coupler, 1 in NPT(M) inlet x 1/4 in NPT(F) outlet, 4 pin, stainless steel

EPV™ is a trademark of Micro Matic USA, Inc.

Ordering Information

Micro Matic Packages

Includes coupler, valve and downtube.

	Part Number	Description
	24W142	Micro Matic EPV suction package – coupler (17C907), container valve (127634), 55 gal downtube (127793)
	24W141	Micro Matic EPV suction package – coupler (17C907), container valve (127634), 275 gal downtube (127794)
	24W140	Micro Matic EPV suction package – coupler (17C907), container valve (127634), 330 gal downtube (127635)
	24W145	Micro Matic RSV suction package – coupler (17C908), container valve (127637), 55 gal downtube (127795)
	24W144	Micro Matic RSV suction package – coupler (17C908), container valve (127637), 275 gal downtube (127796)
	24W143	Micro Matic RSV suction package – coupler (17C908), container valve (127637), 330 gal downtube (127639)

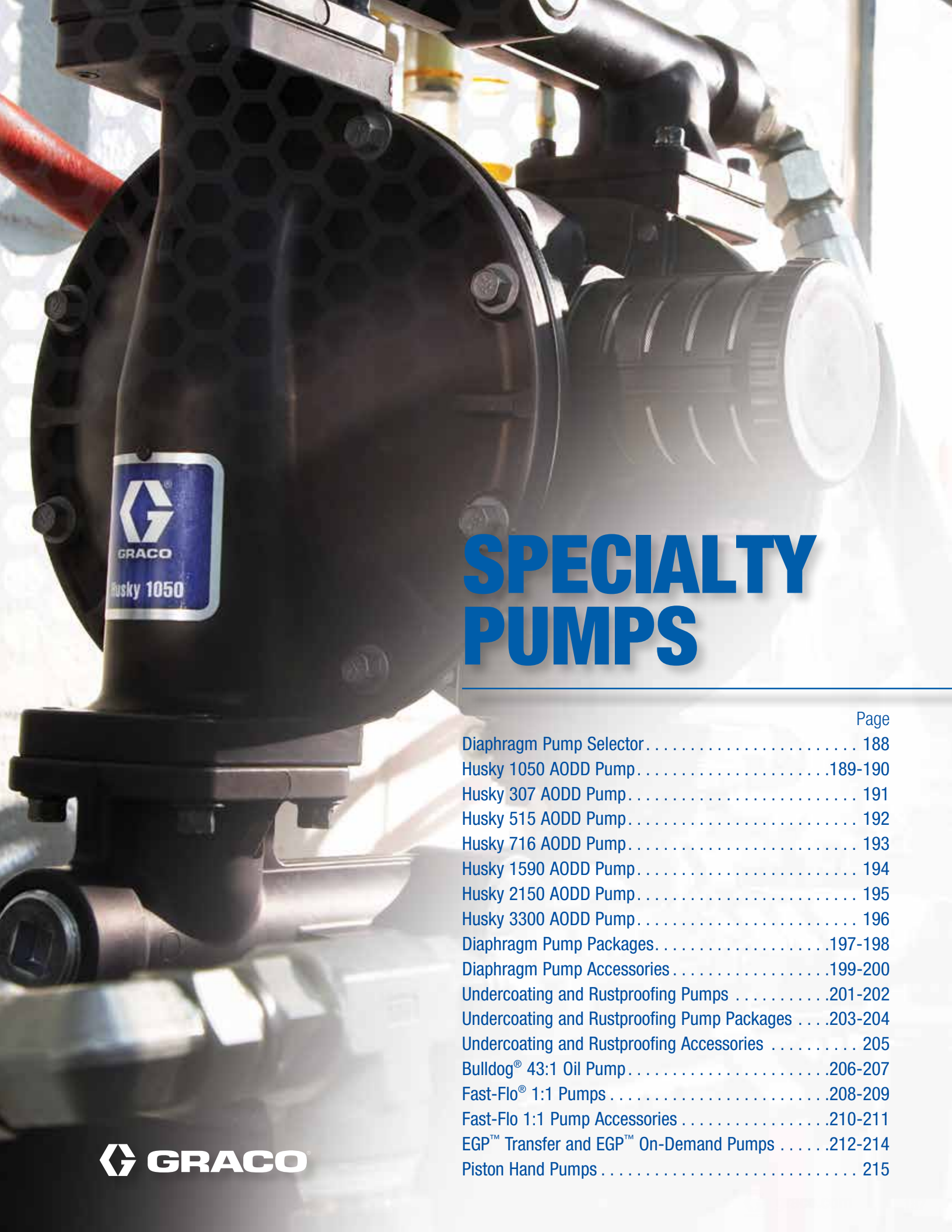

SPECIALTY PUMPS

	Page
Diaphragm Pump Selector	188
Husky 1050 AODD Pump	189-190
Husky 307 AODD Pump	191
Husky 515 AODD Pump	192
Husky 716 AODD Pump	193
Husky 1590 AODD Pump	194
Husky 2150 AODD Pump	195
Husky 3300 AODD Pump	196
Diaphragm Pump Packages	197-198
Diaphragm Pump Accessories	199-200
Undercoating and Rustproofing Pumps	201-202
Undercoating and Rustproofing Pump Packages	203-204
Undercoating and Rustproofing Accessories	205
Bulldog® 43:1 Oil Pump	206-207
Fast-Flo® 1:1 Pumps	208-209
Fast-Flo 1:1 Pump Accessories	210-211
EGP™ Transfer and EGP™ On-Demand Pumps	212-214
Piston Hand Pumps	215

GRACO

Diaphragm Pump Selection Guide

Oil | Fuel | Water | Antifreeze | Washer Fluid

Husky Series	Part Number	Pump Description	Fluids	Listings	Max PSI	Reference Pages
Husky 307	D31255	Husky 307 Acetal – 3/8 in Acetal/TPE	• Oil evacuation • Oil transfer • Water • Antifreeze • Windshield wash fluid	–	100 psi (6.9 bar)	193
Husky 515	243669	Husky 515 Acetal Split Inlet – 3/4 in Acetal/Buna Dual Inlet	• 50/50 windshield wash solution • Water • Antifreeze	–	100 psi (6.9 bar)	194
Husky 716	241906	Husky 716 Aluminum – 3/4 in Aluminum/Buna-N	• Oil evacuation • Oil transfer • Water • Antifreeze • Windshield wash fluid	–	100 psi (6.9 bar)	195
Husky 1050	647016	Husky 1050 Aluminum – 1 in Aluminum/TPE	• Water • Antifreeze • Fuel transfer • Gasoline (up to 10% ethanol)	UL	100 psi (6.9 bar)	191-192
Husky 1050	647731	Husky 1050 Aluminum – 1 in Aluminum/Buna-N	• Oil evacuation • Oil transfer	UL	100 psi (6.9 bar)	191-192
Husky 1050	647648	Husky 1050 Aluminum – 1 in Aluminum/TPE	• Fuel dispense • Gasoline (up to 10% ethanol)	UL	50 psi (3.5 bar)	191-192
Husky 1590	DB3525	Husky 1590 Aluminum – 1.5 in Aluminum/TPE	• Oil evacuation • Oil transfer • Water • Antifreeze	–	120 psi (8.3 bar)	196
Husky 2150	DF3525	Husky 2150 Aluminum – 2 in Aluminum/TPE	• Oil evacuation • Oil transfer • Water • Antifreeze	–	120 psi (8.3 bar)	197
Husky 3300	652002	Husky 3300 Aluminum – 3 in Aluminum/TPE	• Oil evacuation • Oil transfer • Water • Antifreeze	–	125 psi (8.6 bar)	198

UL Listed!

Efficiency, Performance and Best-in-Class Engineering

Husky pneumatic double-diaphragm pumps feature a stall-free, low-pulsation air valve, which provides a smooth and rapid changeover. Typical applications include oil transfer and evacuation, fuel dispense and transfer, windshield wash solution dispense, and water and antifreeze dispense. Some models UL-approved for use in pumping gasoline and gasoline/alcohol blends up to 10% ethanol, diesel fuel, fuel oil and lubricating oil.

Modular Air Valve

Stall-free, low-pulsation operation provides smooth and rapid changeover

One-Piece Center Section

Eliminates air leaks for more efficient operation

Longer Diaphragm Life

Up to 5x longer diaphragm life for less maintenance and downtime

Four-Bolt Joint Design

Bolted design provides even sealing pressure for leak-free operation

Multiple Ports

Increased number of ports for installation flexibility

Typical Applications

- Automotive dealerships
- Fast lube centers
- Service shops
- Heavy-duty dealerships
- Fleet services facilities
- In-plant
- Lube trucks
- Mining

Typical Fluids Handled

- Oil
- Fuel
- Water
- Antifreeze
- Washer fluid

Pump Performance

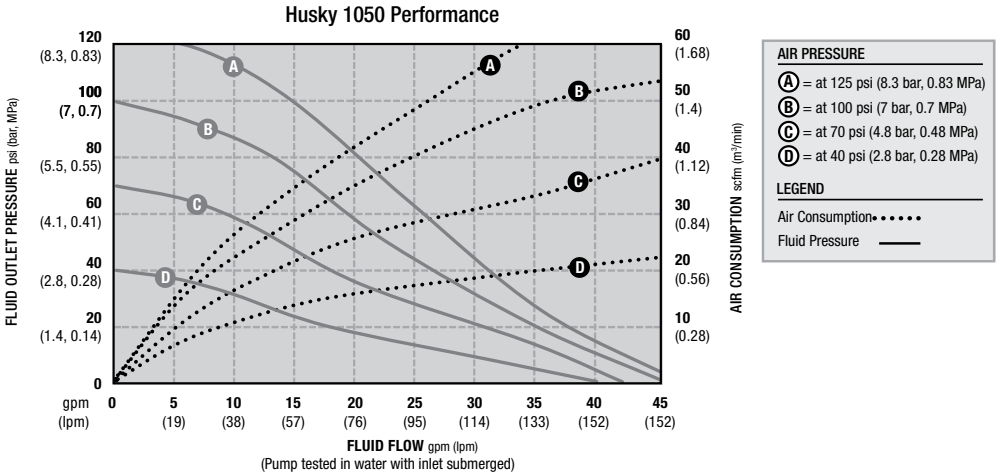

Husky 1050 AODD Pump

Oil | Fuel | Water | Antifreeze | Washer Fluid

Technical Specifications

Maximum fluid working pressure	
Transfer Pump	100 psi (6.9 bar, 0.69 MPa)
Fuel Dispense Pump	50 psi (3.5 bar, 0.35 MPa)
Air pressure operating range	
Transfer Pump	20 psi to 100 psi (1.4 bar to 6.9 bar, 0.14 MPa to 0.69 MPa)
Fuel Dispense Pump	0 psi to 50 psi (1.4 bar to 3.5 bar, 0.14 MPa to 0.35 MPa)
Air consumption at 70 psi (0.48 MPa, 4.8 bar), 20 gpm (76 lpm)	25 scfm
Air consumption at 50 psi (0.35 MPa, 3.5 bar), full flow	25 scfm
Fluid displacement per cycle	0.17 gal (0.64 l)
Maximum values with water as media under submerged inlet conditions at ambient temperature:	
Maximum air consumption	64 scfm
Maximum free-flow delivery	
Transfer Pump	50 gpm (189 lpm)
Fuel Dispense Pump	38 gpm (144 lpm)
Maximum pump speed	
Transfer Pump	275 cpm
Fuel Dispense Pump	210 cpm
Maximum suction lift (varies widely based on ball/seat selection and wear, operating speed, material properties and other variables)	16 ft (4.9 m) dry, 29 ft (8.8 m) wet
Maximum-size pumpable solids	1/8 in (3.2 mm)
Recommended cycle rate for continuous use	93 cpm to 140 cpm
Recommended cycle rate for circulation systems	20 cpm
Sound Power*	
at 70 psi (0.48 MPa, 4.8 bar) and 50 cpm	78 dB(A)
at 100 psi (0.7 MPa, 7.0 bar) and full flow	90 dB(A)
Sound Pressure**	
at 70 psi (0.48 MPa, 4.8 bar) and 50 cpm	84 dB(A)
at 100 psi (0.7 MPa, 7.0 bar) and full flow	96 dB(A)
Operating temperature range	10°F to 150°F (-12°C to 65°C)
Air inlet size	1/2 in NPT(F)
Fluid inlet size	1 in NPT(F)
Fluid outlet size	1 in NPT(F)
Weight	23 lb (10.5 kg)
Wetted parts	Aluminum, TPC-ET, acetal, PTFE, Buna-N
Non-wetted external parts	Aluminum, coated carbon steel
Instruction manual	313597

*Sound power measured per ISO-9614-2.

**Sound pressure was tested 3.28 ft (1 m) from equipment.

Ordering Information

Husky 1050 AODD Pumps

Part Number	Description	Maximum Fluid Working Pressure	Fluids Handled
647016	Husky 1050 Aluminum Pump – 1 in, Aluminum/TPE	100 psi (6.9 bar)	Water / antifreeze / fuel transfer
647731	Husky 1050 Aluminum Pump – 1 in, Aluminum/Buna-N	100 psi (6.9 bar)	Oil evacuation / oil transfer
647648	Husky 1050 Aluminum Pump – 1 in, Aluminum/TPE	50 psi (3.5 bar)	Fuel dispense

Husky 307 AODD Pump

- 3/8 in fluid connections
- Fluid delivery up to 7 gpm (26.5 lpm)
- Operate as low as 20 psi up to 100 psi for max flow
- Maximum working pressure of 100 psi for long line runs
- End porting available
- High-efficiency air valve operates at maximum of 6 scfm
- Groundable to reduce risk of static and electric shock

Technical Specifications

Maximum fluid working pressure	100 psi (6.9 bar, 0.69 MPa)
Maximum free-flow delivery*	7.0 gpm (26.5 lpm)
Maximum pump speed	330 cpm
Fluid displacement per cycle**	0.02 gal (0.076 l)
Maximum suction lift	12 ft (3.7 m) dry
Maximum-size pumpable solids	0.06 in (1.5 mm)
Maximum ambient operating temperature***	180°F (82.2°C)
Maximum diaphragm operating temperature***	150°F (65.6°C)
Typical sound level at 50 psi (3.5 bar, 0.35 MPa) air @ 50 cpm	75 dB(A)
Maximum air consumption	6 scfm (0.17 m^3/min)
Air pressure operating range	20 psi to 100 psi (1.4 bar to 6.9 bar, 0.14 MPa to 0.69 MPa)
Air inlet size	1/4 NPT(F) or BSPT(F)
Fluid inlet size	3/8 NPT(F)
Fluid outlet size	3/8 NPT(F)
Weight	5.2 lb (2.4 kg)
Wetted parts	Acetal with stainless steel fibers, PTFE
Instruction manual	308553

*Flow rates are with muffler and do not vary based on diaphragm material. **Displacement per cycle may vary based on suction condition, discharge head, air pressure and fluid type. ***Actual pump performance may be affected by prolonged usage at temperature.

Ordering Information

Husky 307 AODD Pump

Part Number	Description
D31255	Husky 307 Acetal Pump – 3/8 in, Acetal/TPE

Pump Performance

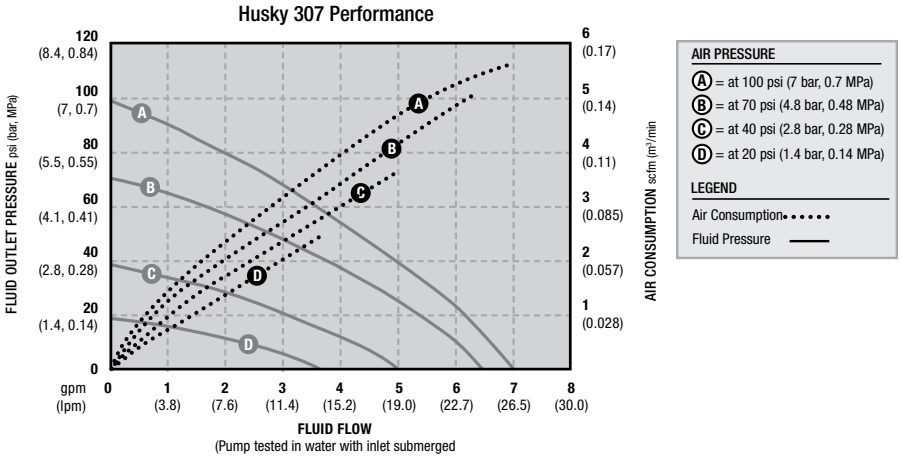

Oil | Water | Antifreeze | Washer Fluid

Husky 515 AODD Pump

- 1/2 in fluid connections
- Fluid delivery up to 15 gpm (56.7 lpm)
- Operate as low as 30 psi up to 100 psi for max flow
- Maximum working pressure of 100 psi for long line runs
- Center and end porting options available
- High-efficiency air valve operates at maximum of 28 scfm
- Groundable to reduce risk of static and electric shock

Technical Specifications

Maximum fluid working pressure	100 psi (6.9 bar, 0.69 MPa)
Maximum free-flow delivery*	15 gpm (57 l/min)
Maximum pump speed	400 cpm
Fluid displacement per cycle**	0.04 gal (0.15 l)
Maximum suction lift	15 ft (4.5 m) dry, 25 ft (7.6 m) wet
Maximum-size pumpable solids	3/32 in (2.5 mm)
Maximum ambient operating temperature***	180°F (82.2°C)
Maximum diaphragm operating temperature***	180°F (82.2°C)
Typical sound level at 70 psi (4.8 bar, 0.48 MPa) air @ 50 cpm	77 dB(A)
Maximum air consumption	28 scfm (0.672 m^3/min)
Air pressure operating range	30 psi to 100 psi (2.1 bar to 6.9 bar, 0.21 MPa to 0.69 MPa)
Air inlet size	1/4 NPT(F)
Fluid inlet size	3/4 in NPT(F)
Fluid outlet size	1/2 and 3/4 in NPT(F)
Weight	7.8 lb (3.5 kg)
Wetted parts	Groundable acetal, Buna-N, PTFE
Instruction manual	309204

*Flow rates are with muffler and do not vary based on diaphragm material. **Displacement per cycle may vary based on suction condition, discharge head, air pressure and fluid type. ***Actual pump performance may be affected by prolonged usage at temperature.

Ordering Information

Husky 515 AODD Pump

Part Number	Description
243669	Husky 515 Acetal Split Inlet – 3/4 in, Acetal/Buna Dual Inlet

Pump Performance

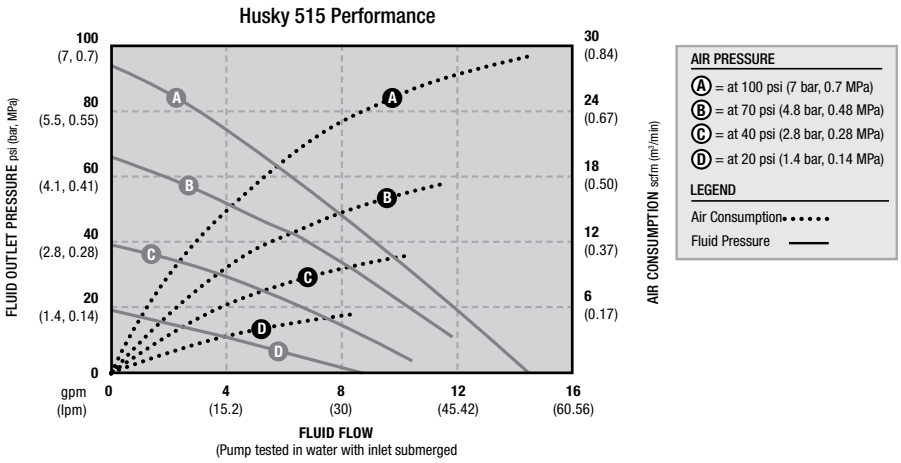

Specialty Pumps

Husky 716 AODD Pump

- 3/4 in fluid connections
- Fluid delivery up to 16 gpm (60.6 lpm)
- Operate as low as 30 psi up to 100 psi for max flow
- Maximum working pressure of 100 psi for long line runs
- Center and end porting options available
- High-efficiency air valve operates at maximum of 28 scfm
- Groundable to reduce risk of static and electric shock

Technical Specifications

Maximum fluid working pressure	100 psi (6.9 bar, 0.69 MPa)
Maximum free-flow delivery*	16 gpm (61 l/min)
Maximum pump speed	400 cpm
Fluid displacement per cycle**	0.04 gal (0.15 l)
Maximum suction lift	15 ft (4.5 m) dry, 25 ft (7.6 m) wet
Maximum-size pumpable solids	3/32 in (2.5 mm)
Maximum ambient operating temperature***	180°F (82.2°C)
Maximum diaphragm operating temperature***	180°F (82.2°C)
Typical sound level at 70 psi (4.8 bar, 0.48 MPa) air @ 50 cpm	77 dB(A)
Maximum air consumption	28 scfm (0.672 m^3/min)
Air pressure operating range	25 psi to 100 psi (1.8 bar to 6.9 bar, 0.18 MPa to 0.69 MPa)
Air inlet size	1/4 NPT(F)
Fluid inlet size	3/4 in NPT(F)
Fluid outlet size	3/4 in NPT(F)
Weight	8.5 lb (3.9 kg)
Wetted parts	Buna-N, acetal, aluminum, stainless steel, PTFE, zinc-plated steel
Instruction manual	308573

*Flow rates are with muffler and do not vary based on diaphragm material. **Displacement per cycle may vary based on suction condition, discharge head, air pressure and fluid type. ***Actual pump performance may be affected by prolonged usage at temperature.

Ordering Information

Husky 716 AODD Pump

Part Number	Description
241906	Husky 716 Aluminum – 3/4 in, Aluminum/Buna-N

Pump Performance

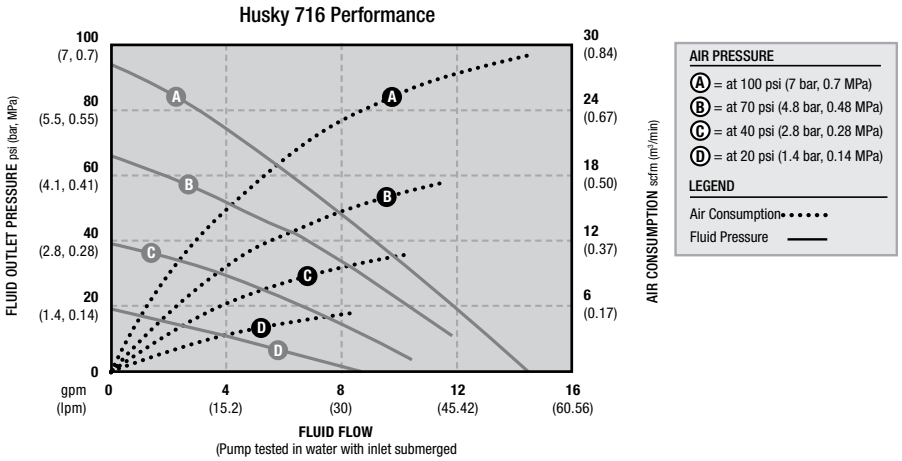

Specialty Pumps

Oil | Water | Antifreeze | Washer Fluid

Husky 1590 AODD Pump

- 1-1/2 in fluid connections
- Fluid delivery up to 90 gpm (340.7 lpm)
- Operate as low as 20 psi up to 120 psi for max flow
- Maximum working pressure of 120 psi for long line runs
- End porting available
- High-efficiency air valve operates at maximum of 125 scfm
- Groundable to reduce risk of static and electric shock

Technical Specifications

Maximum fluid working pressure	120 psi (8.4 bar, 0.84 MPa)
Maximum free-flow delivery*	100 gpm (378.5 l/min)
Maximum pump speed	200 cpm
Fluid displacement per cycle**	0.5 gal (1.96 l)
Maximum suction lift	20 ft (6.1 m) dry
Maximum-size pumpable solids	0.19 in (4.8 mm)
Maximum ambient operating temperature***	150°F (65.5°C)
Maximum diaphragm operating temperature***	150°F (65.5°C)
Typical sound level at 70 psi (4.8 bar, 0.48 MPa) air @ 125 cpm	77 dB(A)
Maximum air consumption	125 scfm (3.5 m^3/min)
Air pressure operating range	20 psi to 100 psi (1.4 bar to 6.9 bar, 0.14 MPa to 0.69 MPa)
Air inlet size	1/2 NPT(F)
Fluid inlet size	1-1/2 NPT(F) or BSPT(F)
Fluid outlet size	1-1/2 NPT(F) or BSPT(F)
Weight	33.5 lb (15.2 kg)
Wetted parts	Acetal, aluminum, TPE, PTFE
Instruction manual	308441

*Flow rates are with muffler and do not vary based on diaphragm material. **Displacement per cycle may vary based on suction condition, discharge head, air pressure and fluid type. ***Actual pump performance may be affected by prolonged usage at temperature.

Ordering Information

Husky 1590 AODD Pump

Part Number	Description
DB3525	Husky 1590 Aluminum – 1.5 in, Aluminum/TPE

Pump Performance

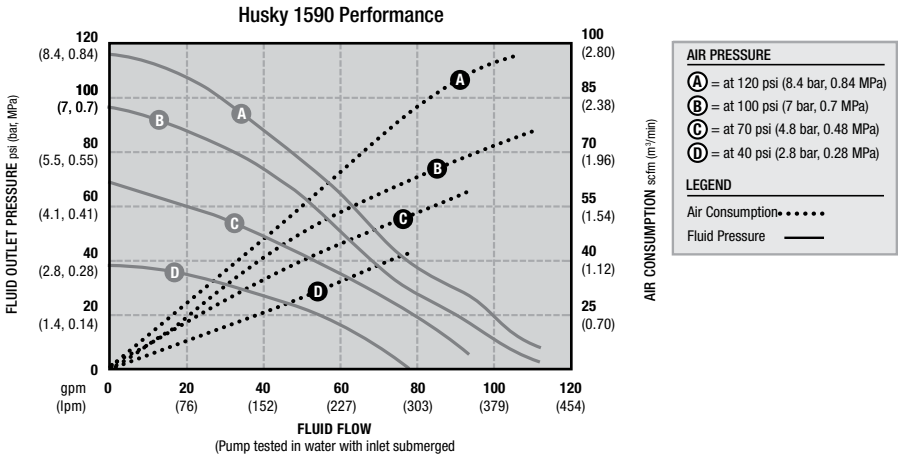

Husky 2150 AODD Pump

- 2 in fluid connections
- Fluid delivery up to 150 gpm (567.8 lpm)
- Operate as low as 20 psi up to 120 psi for max flow
- Maximum working pressure of 120 psi for long line runs
- End porting available
- High-efficiency air valve operates at maximum of 175 scfm
- Groundable to reduce risk of static and electric shock

Technical Specifications

Maximum fluid working pressure	120 psi (8.4 bar, 0.84 MPa)
Maximum free-flow delivery*	150 gpm (568 l/min)
Maximum pump speed	145 cpm
Fluid displacement per cycle**	1.03 gal (3.9 l)
Maximum suction lift	20 ft (6.1 m) dry
Maximum-size pumpable solids	0.25 in (6.3 mm)
Maximum ambient operating temperature***	150°F (65.5°C)
Maximum diaphragm operating temperature***	150°F (65.5°C)
Typical sound level at 70 psi (4.8 bar, 0.48 MPa) air @ 125 cpm	78 dB(A)
Maximum air consumption	175 scfm (4.9 m^3/min)
Air pressure operating range	20 psi to 120 psi (1.4 bar to 8.4 bar, 0.14 MPa to 0.84 MPa)
Air inlet size	1/2 NPT(F)
Fluid inlet size	2 in NPT(F)
Fluid outlet size	2 in NPT(F)
Weight	58 lb (26.3 kg), 62 lb (28.1 kg) – Extended
Wetted parts	Acetal, aluminum, TPE, PTFE
Instruction manual	308368

*Flow rates are with muffler and do not vary based on diaphragm material. **Displacement per cycle may vary based on suction condition, discharge head, air pressure and fluid type. ***Actual pump performance may be affected by prolonged usage at temperature.

Ordering Information

Husky 2150 AODD Pump

Part Number	Description
DF3525	Husky 2150 Aluminum – 2 in, Aluminum/TPE

Pump Performance

Husky 2150 Performance

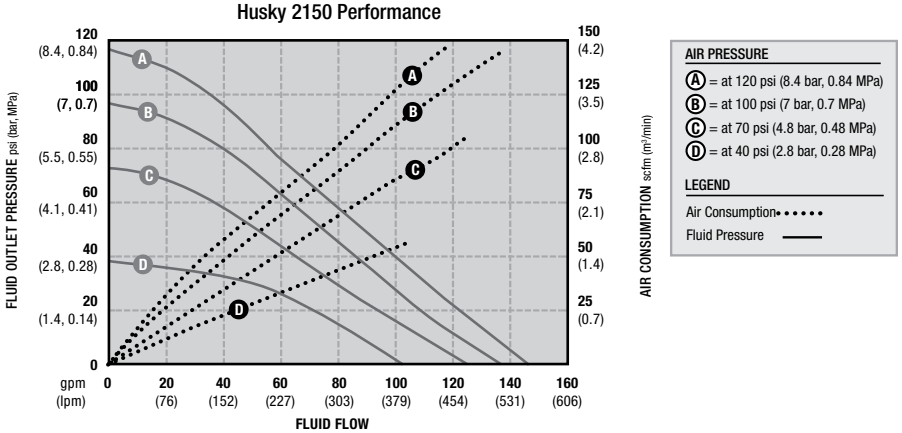

(Pump tested in water with inlet submerged

Oil | Water | Antifreeze | Washer Fluid

Husky 3300 AODD Pump

- 3 in fluid connection
- Fluid delivery up to 300 gpm (1,135.6 lpm)
- Operate as low as 20 psi up to 125 psi for max flow
- Maximum working pressure of 125 psi for long line runs
- Rotatable center porting available
- High-efficiency air valve operates at maximum of 335 scfm
- Groundable to reduce risk of static and electric shock

Technical Specifications

Maximum fluid working pressure	125 psi (8.4 bar, 0.84 MPa)
Maximum free-flow delivery*	300 gpm (1,135 l/min)
Maximum pump speed	103 cpm
Fluid displacement per cycle**	2.9 gal (11 l)
Maximum suction lift	8 ft (2.4 m) dry, 28 ft (8.5 m) wet
Maximum-size pumpable solids	0.5 in (13 mm)
Maximum ambient operating temperature***	150°F (65.5°C)
Maximum diaphragm operating temperature***	150°F (65.5°C)
Typical sound level at 50 psi (3.4 bar, 0.34 MPa) air @ 50 cpm	92 dB(A)
Maximum air consumption	335 scfm (9.5 m^3/min)
Air pressure operating range	20 psi to 125 psi (1.4 bar to 8.6 bar, 0.14 MPa to 0.86 MPa)
Air inlet size	3/4 NPT(F)
Fluid inlet size	3 in (76.2 mm) NPT or BSPT with ANSI/DIN flange
Fluid outlet size	3 in NPT(F) or BSPT(F)
Weight	150 lb (68 kg)
Wetted parts	Acetal, aluminum, carbon-coated steel, TPE
Instruction manual	3A0410

*Maximum values with water as media at ambient temperature. Water level is approximately 3 ft above pump inlet.
**Startup pressures and displacement per cycle may vary based on suction condition, discharge head, air pressure and fluid type.
***Sound power measured per ISO-9614-2. Sound pressure was tested 3.28 ft (1 m) from equipment.

Ordering Information

Husky 3300 AODD Pump

Part Number	Description
652002	Husky 3300 Aluminum – 3 in, Aluminum/TPE

Pump Performance

Husky 3300 Performance

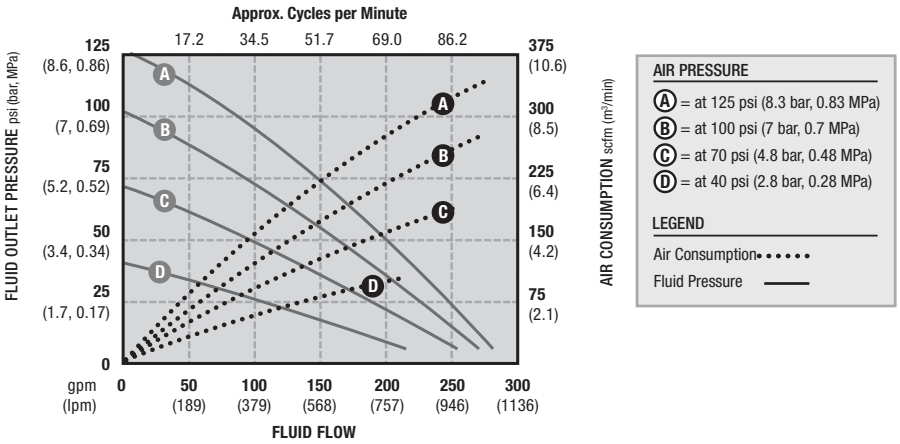

Ordering Information

Pre-Mixed Windshield Wash Solvent and Coolant Dispense

Package Number		237161
Pump Type		Husky 307
Pump		D31255
Installation Kit		237160
Installation Kit Includes	Air Filter	110146
	Air Gauge	108190
	Air Regulator	110318
	Fluid Connect Hose – 4 ft	220596
	Air Connect Hose – 6 ft	109125
	Mounting Bracket	190125
	Suction Kit	223888
Wall Bracket Kit		224835
Instruction Manual		308426

Antifreeze Washer Fluid

Ordering Information

Bulk Antifreeze and Windshield Solvent Transfer Packages

Package Number	244679	244680	244681	244682
Pump Type	Husky 1050 – Dual Inlet	Husky 1050 – Single Inlet	Husky 515 – Dual Inlet	Husky 716 – Single Inlet
Pump	647016	647016	243669	241906
Air Regulator	244844	244844	110147	110147
Fluid Connect Hose	115042	115042	109105	109105
Air Connect Hose	205418	205418	109125	109125
Air Shut-Off Valve	110225	110225	110223	110223
Wall Mount Bracket	24C637	24C637	224835	224835
Dual Inlet Manifold	24D147	–	–	–
Suction Kit	(2) 236054	236054	(2) 236054	236054
Thermal Relief Kit	238428	238428	238428	238428
Instruction Manual	309353	309353	309353	309353

Air Line Filters

Husky Pump	307	515/716	1050	1590	2150	3300
Part Number	110146	110146	106148	106149	106150	106150

Air Regulator and Gauge

Husky Pump	307	515/716	1050	1590	2150	3300
Part Number	110147	110147	246946	202858	206199	207651

Air Quick-Connect Coupler

Husky Pump	307	515/716	1050	1590	2150	3300
Part Number	208536	208536	110199	110199	110199	110200

Air Quick-Connect Nipple

Husky Pump	307	515/716	1050	1590	2150	3300
Part Number	169970	169970	110196	110196	110196	110197

Bleed-Type Air Valve

Husky Pump	307	515/716	1050	1590	2150	3300
Part Number	110223	110223	110224	110225	110225	110226

Dual-Inlet Manifold

Husky Pump	307	515	1050	1590	2150	3300
Part Number	237211	194347	24D205	–	–	–

Grounding Wire and Clamp

Husky Pump	307	515/716	1050	1590	2150	3300
Part Number	222011	222011	238909	222011	238909	238909

Suction Hose Kit

Husky Pump	307	515/716	1050	1590	2150	3300
Part Number	236054	236054	236054	222916	222916	–

Diaphragm Pump Accessories

Thermal Relief Kit

Husky Pump	307	515/716	1050	1590	2150	3300
Part Number	238899	238428	238428	–	–	–

Thermal Relief Valves – 150 psi (10.3 bar)

Husky Pump	307	515/716	1050	1590	2150	3300
Part Number	113497 al/bn, 112119 ss/tf					

Wall Bracket

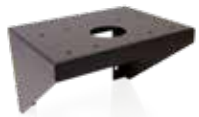

Husky Pump	307	515/716	1050	1590	2150	3300
Part Number	224835	224835	24C637	–	–	–

Air-Operated Double-Diaphragm Transfer Pumps Replacement Parts

Pump Number	D31255	243669	241906	647016	647731	647648	DB3525	DF3525	652002
Air Valve Replacement Kit	239952	241657	241657	24B768	24B768	24B768	236273	236273	24K860
Seats	D03200	D05200	D05200	24B634	24B632	24B634	D0B500	D0F500	24K932
Balls	D03050	D05070	D05070	24B639	24B639	24B639	D0B020	D0F020	24K937
Diaphragm Kit	D03005	D05007	D05007	24B624	24B624	24B624	D0B005	D0F005	24K901
Fluid Repair Kit (Ball, Seats, Diaphragm)	D03255	D05277	D05277	25A857	–	25A857	D0B525	D0F525	25A874

7 Year Warranty!

Ideal for Undercoating and Rustproofing Application in Medium-Sized Shops

Utilizing the durable Fire-Ball® 300 pump, these kits are designed for use in medium-volume undercoating and rustproofing dispense applications. A three-inch differential air motor ensures smooth pumping, and the double-acting pump design provides reliable material flow and accurate dispense.

Durable

Thick cast aluminum air motor housing offers unmatched durability.

Superior Material Handling

Double-acting pump ensures smooth fluid flow.

Extended Seal Life

In-line pump design aligns the air motor piston and fluid piston rods to maximize seal life.

Wetted-Parts Options

Available in carbon steel for petroleum-based or SST for water-based materials.

Corrosion-Resistant

Corrosion-resistant design utilizes liquid nitriding, nickel plating, stainless steel, aluminum and chrome on key components for longer life.

Typical Applications

- Undercoating, rustproofing and sound-deadening materials
- Automotive and heavy-duty vehicle dealerships
- Fast lube centers and service shops
- Fleet service facilities

Typical Fluids Handled

- Undercoating and rustproofing (Verify chemical compatibility for pump's wetted components with undercoating material supplier or contact Graco directly at 1-800-533-9655)

Pump Performance

Fire-Ball 300 15:1 Pumps

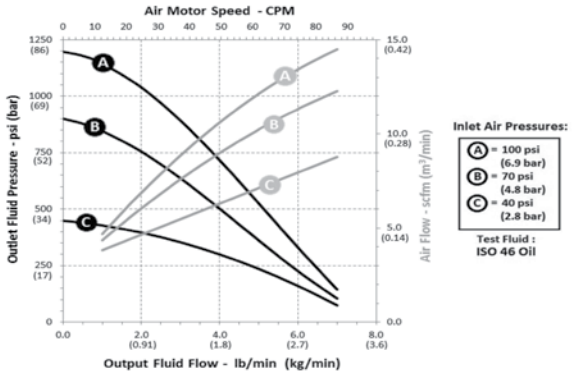

Technical Specifications

Fluid Pressure Ratio	15:1
Air Motor Effective Diameter	3 in (76.2 mm)
Annual Usage	Up to 10,000 lb (4,535 kg)
Maximum Fluid Working Pressure	2,700 psi (186 bar / 18.6 MPa)
Approximate Free-Flow Rate @ 100 psi	7.5 lb/min (3.4 kg/min)
Output per Cycle	1.29 oz (36.6 g)
Continuous-Duty Flow Rate	0.7 lb/min (0.32 kg/min)
Approximate Air Use and Flow @ 100 psi (80 cpm)	14 @ 6.5 lb/min (0.40 @ 2.9 kg/min)
Air Inlet	3/8 in NPT(F)
Fluid Outlet	1/4 in NPT(F)
Air Operation Range	40 psi to 180 psi (2.8 bar to 12.5 bar)
Max Recommended Pump Speed	66 cpm
Cycles per Pound	12.4 cpp
Cycles per Kg	27 cpk
Wetted Parts	CS, AL, leather, PTFE, rubber
Sound Pressure Level	77.8 dB(A)
Sound Power Level	85.6 dB(A)
Approximate Weight	22 lb (10 kg)
Instruction Manual	306531

Ordering Information

Undercoating Packages

Package Number	222077	226342	226269
Type of Package	Stationary	Portable Dolly-Mounted	Stationary
Ratio	15:1	15:1	15:1
Container Size	35 lb (16 kg)	120 lb (54 kg)	400 lb (180 kg)
Pump Part Number	206405	206699	206700
Dispense Kit*	222079	222079	222082
Tip	286517	286517	286517
Hose Length	15 ft (4.6 m)	15 ft (4.6 m)	25 ft (7.6 m)
Drum Cover	222058	204574	200326
Portable Base	–	204144	–
Instruction Manual	307879	307879	307879

*Dispense kit includes Air Regulator (110234), Air Gauge (100960), Spray Gun (234237)

Ordering Information

Spray Masking Package

Package Number	224826
Type of Package	Bung Mounted Stationary
Ratio	15:1
Container Size	400 lb (180 kg)
Pump Part Number	224825 (SST pump)
Flexible Downtube	224022*
Dispense Kit**	224023
Tip	286211/286621
Hose Length	25 ft (7.6 m)
Instruction Manual	308069

*224022 is long enough for 400 lb (180 kg) container, but can be trimmed to accommodate smaller containers. **Dispense kit includes Flex Plus™ spray gun (235457).

Ordering Information

Application Gun

	Part Number	Description
	234237	Four-finger silver gun with tip guard 243161 and tip 286517. 4,500 psi (310 bar) x 3/8 NPT(f) inlet. Must order 155570 adapter and 239663 straight swivel to accommodate gun to 1/4 in (mbe) hose.

Bung Adapter

	Part Number	Description
	239966	Bung adapter compatible with Fire-Ball 300, 15:1 pump

Filter

	Part Number	Description
	214570	60-mesh aluminum filter, 3/8 NPT(F) inlet, 1/4 NPT(F) outlet. Maximum working pressure 3,000 psi (210 bar).

Nozzle Extension

	Part Number	Description
	206496	Nozzle extension delivers 360° coating fan into blind areas. Length 30-3/4 in (99 cm) x 7/8-14(f) end. Tip 206502, size .043.

Replacement Screen Elements (SST)

		Part Number		
		30 Mesh	60 Mesh	100 Mesh
	3-Pack	224458	224459	224469
	25-Pack	238436	238438	238440

Swivel

	Part Number	Description
	202577	Z-swivel allows non-binding movement for hard-to-reach locations. Order 155570 adapter separately to accommodate 234237 gun.

Bulldog® 43:1 Oil Pump

Oil | Gear Lube | Hydraulic Oil | ATF

1 Year Warranty

Reliable Operation in the Harshest Environments

With its efficient, large-ported air valve, the Bulldog 43:1 air-powered pump is the highest-performing in its class. Downtime is minimized by an air motor design that has been developed and tested for more than 10 million cycles of operation.

Added Safety

Grounded lug prevents static buildup.

Easy Installation

Compact, low-profile design makes installation easier.

Corrosion-Resistant

Lightweight aluminum construction.

Built-In Reliability

Tested to 10 million cycles without failure.

Typical Applications

- Supplies hydraulic oil to accumulators in oil rig blow-out prevention systems.

Typical Fluids Handled

- Hydraulic oil

Pump Performance

Bulldog 43:1 Pumps

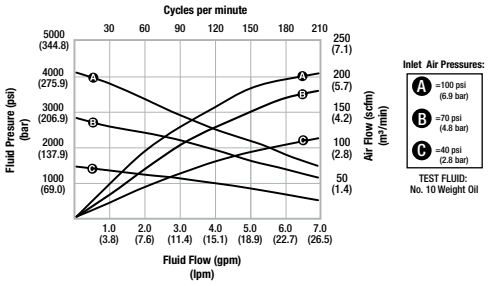

Specialty Pumps

Technical Specifications

Fluid Pressure Ratio	43:1
Maximum Fluid Working Pressure	4,300 psi (301 bar / 30.1 MPa)
Maximum Air Input Pressure	100 psi (7 bar)
Air Inlet	3/4 in NPSM(F)
Fluid Inlet	1 in NPT(F)
Fluid Outlet	3/4 in NPT(F)
Wetted Parts	Carbon steel, stainless steel, chrome plating, zinc plating, nickel plating, brass, Buna-N
Instruction Manual	309966

Ordering Information

Bulldog 43:1 Pumps

Part Number	Description
218334	43:1 Bulldog hydraulic supply pump

Accessories

Air Pressure Regulators

Part Number	Description
206197	1/2 in NPT inlet and outlet
207755	3/4 in NPT inlet and outlet

Air Line Filters

Part Number	Description
106149	1/2 in NPT inlet and outlet
106150	3/4 in NPT inlet and outlet

Air Line Lubricators

Part Number	Description
214848	1/2 in NPT inlet and outlet
214849	3/4 in NPT inlet and outlet

Grounding Clamp and Wire

Part Number	Description
103538	Grounding clamp
222011	Ground wire

Bleed-Type Master Air Valve

Part Number	Description
107142	1/2 in NPT inlet and outlet

Repair Kits

Part Number	Description
24U227	Pump lower repair kit
24U228	Air motor repair kit
24W515	Pump and air motor repair kit

ATF | Water | Antifreeze | Washer Fluid | Oil/ Used Oil

Used for Low-Volume Dispense of a Variety of Fluids

This air-operated piston pump is ideal for pumping various fluids and provides a continuous-duty flow rate of up to 5 gpm.

High-Quality Air Motor

Differential air motor ensures smooth pumping.

Lightweight Design

Allows for easy transport and drum insertion.

Easily Controlled Flow Rate

Simple regulation of air supply controls flow rate.

Submersible Suction Tube

Stubby and drum length suction tubes eliminate the need for suction pipe or tube.

Corrosion Resistance

Available stainless steel models offer protection in harsh environments.

Typical Applications

- Low-pressure, high-volume transfer of low viscosity fluids
- Automotive dealerships
- Heavy-duty dealerships
- Fast lube centers
- Fleet service facilities
- Service shops
- In-plant
- Lube trucks
- Mining

Typical Fluids Handled

- Water
- Antifreeze
- Windshield wash fluid

NOTE: Use Fast-Ball® 1:1 for petroleum-based products.

Pump Performance

Fast-Flo 1:1 Pumps

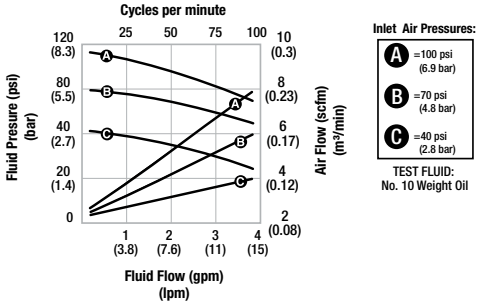

Technical Specifications

Fluid Pressure Ratio	1:1
Air Motor Effective Diameter	1.4 in (35.6 mm)
Maximum Fluid Working Pressure	180 psi (12 bar/1.2 Mpa)
Approximate Free-Flow Rate @ 100 psi (80 cpm)	5 gal/min (19 liters/min)
Output per Cycle	151 cc
Approximate Air Use and Flow @ 100 psi (80 cpm)	7 csfm @ 3.1 gpm (0.2 m^3/mm @ 11.71 lpm)
Air inlet	1/4 in NPT(F)
Fluid Inlet	1-1/2 in NPT(F)
Fluid Outlet	3/4 in NPT(F)
Air Operations Range	40 psi to 180 psi (2.8 bar to 12 bar)
Maximum Pump Speed	100 cpm
Cycles per Gallon	25 cpg
Cycles per Liter	6.6 cpl
Wetted Parts	See ordering info
Sound Pressure Level	72 dB(A)
Sound Power Level	82 dB(A)
Instruction Manual	307427

Ordering Information

Fast-Flo 1:1 Pumps

Includes motor and pump lower assembly.

Fluid	Length	Tube Material	Seal Material	Approvals	Part Number
Antifreeze, Windshield Washer Solvent, ATF, Oil	Drum	Stainless Steel	Polyethylene	ETL, CE, EX	226942
	Universal	Stainless Steel	Polyethylene	ETL, CE, EX	226945
Oil	Drum	Carbon Steel	Buna-N	CE	226947
			Buna-N	CE	226951*
			Leather	CE, EX	237133
			PTFE	CE, EX	237134
			Leather	ETL, CE, EX	226940
			Polyethylene	ETL, CE, EX	226941
		Stainless Steel	Buna-N	CE	226953
			PTFE	CE, EX	237129
	Universal	Carbon Steel	Buna-N	CE	226948
			Leather	CE, EX	237130
			PTFE	CE, EX	237131
			Leather	ETL, CE, EX	226943
			Polyethylene	ETL, CE, EX	226944
		Stainless Steel	Buna-N	CE	226952
			PTFE	CE, EX	237132

*Adjustable downtube length between 18 in (457 mm) and 46.4 in (1,180 mm)

Fast-Flo 1:1 Pump Accessories

Ordering Information

Hose and Fitting Kits

	Part Number	Description	Includes	
			Air Hose / Swivel Elbow	Fluid Hose / Swivel Elbow
	222118	18 in (0.5 m) for connecting wall-mounted Fast-Flo 1:1 pumps to piping	109123 / 155541	109108 / 160327
	222119	6 ft (1.8 m) for use with drum-mounted Fast-Flo 1:1 pumps	109125 / 155541	109105 / 160327

Bung Adapters

	Part Number	Description
	214583	Allows direct mounting of full-length Fast-Flo 1:1 pumps into standard 2 in NPT drum bung (included).
	217359	Sealed bung adapter for Fast-Flo pumps; can be used with suction kit 236054.

Installation Kits

	Part Number	Description
	218316	Includes regulator (104815), gauge (104655) and fittings (169969/114558) as necessary for normal installation.
	210881	Wall mounting bracket for Fast-Flow 1:1 Pumps

Suction Kit

	Part Number	Description	Includes		
			Bung Adapter	Bushing Pipe	6 ft Hose
	236054	6 ft (1.8 m) suction kit for 55 gal (200 l) drums. For use with Fast-Ball, Mini Fire-Ball and Fire-Ball universal pumps.	188845	101496	109105

Ordering Information

Drum Covers

	Part Number	Description
	204574	Drum cover for 10 gal (40 l) and 16 gal (60 l) sized containers. Drum cover mounts on top of an open drum with mounting house for a 1:1 pump. Includes thumb screws and a rubber gasket.
	200326	Drum cover for a 55 gal (200 l) container. Drum cover mounts on top of an open drum, with mounting for a 1:1 pump.

Air Line Filter

	Part Number	Description
	106149	1/2 in NPT inlet and outlet

Air Line Lubricator

	Part Number	Description
	214848	1/2 in NPT inlet and outlet

Oil | Gear Lube | ATF | Antifreeze | Oil/ Waste Oil

Electric Convenience

There's an easier, more efficient way to pump fluid to your critical equipment. Graco's all-electric EGP pumps reduce operating costs without compromising the durability you expect from the industry leader in pumping solutions. Add convenience and peace of mind to your everyday operations.

EGP Transfer Pumps

Use the EGP Transfer Pump in locations where compressed air is unavailable or too cumbersome for short-distance fluid transfer.

Electrical Flexibility

Available in 12 VDC and 115 VAC power options.

Smooth Fluid Flow 8 gpm (30 lpm)

Output flow is continuous and non-pulsating up to 8 gpm (30 lpm).

Heavy-Duty Motor with Long Life

Industrial-grade electric motors with over-temperature protection on 115 VAC models.

Consistent Pressure

Built-in fluid bypass valve protects pump and downstream components.

Pump Protection

Includes inlet strainer to keep larger debris out of pump housing and extend pump life.

Plug and Play

Self-priming, precision-machined pump design.

EGP On-Demand Pumps

Install the EGP On-Demand Pump in a variety of applications including workshops, mobile trucks and industrial plants. Use it as an energy-efficient option to standard pneumatic pumps.

Electrical Flexibility

Available in 12 VDC and 115 VAC power options.

Smooth Fluid Flow 4 gpm (15 lpm)

Output flow is continuous and non-pulsating up to 4 gpm (15 lpm).

Heavy-Duty Motor with Long Life

Industrial-grade electric motor with over-temperature protection on 115 VAC model.

Fluid Flow When Needed

On-demand pressure sensing technology starts and stops the pump during the dispense.

Pump Reliability

Internal inlet and outlet checks keep pump section flooded to maintain prime for reliable performance.

Simultaneous Dispenses

Pump long distances and supply fluid to multiple dispense points.

Typical Applications

- Filling bulk tanks from drums
- Lubricant transfer from remote locations
- Construction equipment
- Agricultural equipment
- Filling in-plant machinery
- Evacuating used oil receivers
- Filling shop oil furnaces with new or used oil
- Automotive and truck service garages
- Fleet marine and personal boat service
- Aircraft maintenance

Typical Fluids Handled

- Petroleum- and synthetic-based oils (motor, gear and ATF)
- Waste oil
- Antifreeze
- Hydraulic fluids
- Cutting oils
- Non-flammable oil-based solvents
- Oil-based herbicide carriers

EGP Transfer Pumps Performance Chart

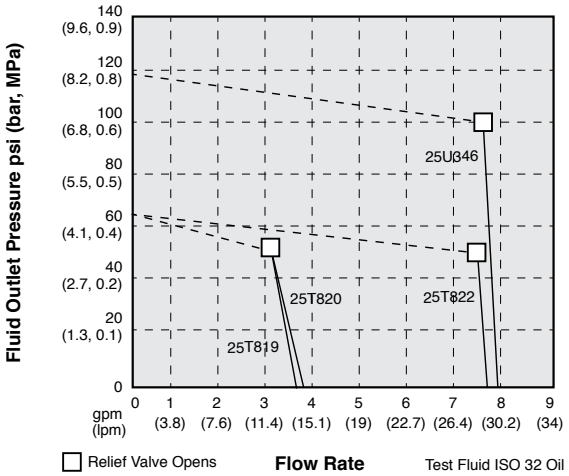

EGP On-Demand Pumps Performance Chart

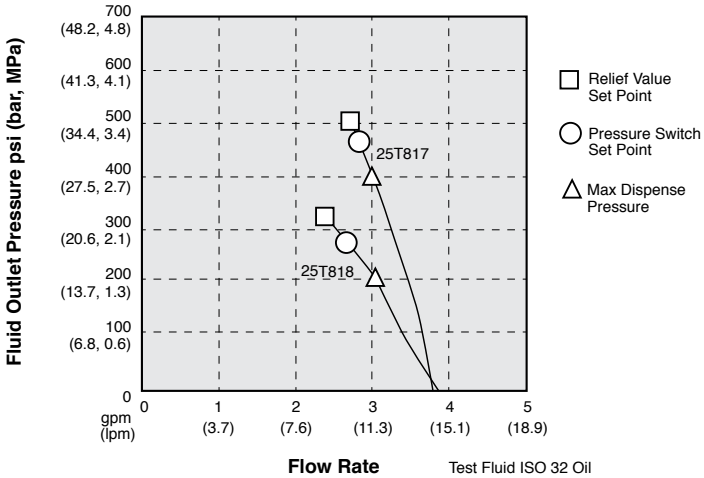

Ordering Information

	EGP Transfer Pump Models				EGP On-Demand Pump Models	
Package Part Number	25T819	25T820	25T822	–	–	–
Pump Part Number	–	–	–	25U346	25T817	25T818
Voltage	12 VDC	115 VAC	115 VAC	115 VAC	115 VAC	12 VDC
Hertz	–	60 Hz	60 Hz	60 Hz	60 Hz	–
Motor Type	TENV	ODP	ODP	TENV – IP55	TENV – IP55	TENV
Horsepower	1/2	1/2	3/4	1.0	1.5	3/4
Maximum Current (Amps)	30	8.7	9.9	9.1	14.4	60
Maximum Free Flow Rate gpm (lpm)	3.8 (14.4)	3.9 (14.8)	7.7 (29.1)	8.0 (30.3)	3.7 (14.0)	3.8 (14.4)
Maximum Pressure psi (bar)	65 (4.5)	65 (4.5)	65 (4.5)	120 (8.3)	500 (34.5)	325 (22.4)
Automatic Relief Setting psi (bar)	65 (4.5)	65 (4.5)	65 (4.5)	120 (8.3)	500 (34.5)	325 (22.4)
Inlet	1 in NPT	1 in NPT	1 in NPT	1 in NPT	3/4 in NPT	3/4 in NPT
Outlet	3/4 in NPT	3/4 in NPT	3/4 in NPT	3/4 in NPT	1/2 in NPT	1/2 in NPT
Bung Adapter	260061					
Dispense Kit	133376			–	–	–
Suction Kit	133375			–	–	–
Wetted Parts	Carbon steel with zinc plating, stainless steel, galvanized steel, aluminum, nitrile, rubber, PVC, PVC cement				Carbon steel with zinc plating, stainless steel, galvanized steel, aluminum, nitrile, rubber	
Weight lb (kg)	25 (11)	22 (10)	25 (11)	25 (11)	36 (16.3)	36 (16.3)
Manual	3A8569	3A8568	3A8568	3A8568	3A8570	3A8571

Ordering Information

Accessories

	Part Number	Description
	133412	Wall mounting bracket, fits all transfer models
	260238	"Y" strainer with 3/4 in NPT female in-line strainer for used oil transfer
	133377	Suction filter
	260124	55 in (1.3 m) PVC suction tube with inlet check valve
	133376	Dispense valve kit
	133375	Suction tube kit, 3/4 in PVC

HOSE AND CORD REELS

Page

Hose Reel Selection Guide 216
LD™ Series Enclosed Hose Reels 218-220
LDX™ Series Hose Reels 221-222
SDX™ Series Hose Reels 223-228
SD™ Series Cord and Light Reels. 229-232
XDX™ Series 10/20 Hose Reels 233-237
XD™ Series 30 Hose Reels. 238-242
XD™ Series 40/50 Hose Reels 243-248
XD™ Series 60/70/80 Powered Hose Reels 250-259
Hose Reel Accessories. 260-261

GRACO®

Graco Hose and Cord Reel Selection Guide

	Typical Application	Typical Fluid	Hose/Cord Length Options	Enclosed	Reference Pages
LD™ Series	• Small maintenance shops • Tire maintenance shops • Small fast lubes • Independent repair facilities • Industrial manufacturing facilities	• Petroleum- and synthetic-based oils • Air • Water • Grease • Antifreeze • Windshield washer fluid	• 35 ft (11 m) • 45 ft (14 m) • 50 ft (15 m)	Yes	218-220
LDX™ Series	• Small maintenance shops • Tire maintenance shops • Small fast lubes • Independent repair facilities • Industrial manufacturing facilities	• Petroleum- and synthetic-based oils • Air • Water • Grease • Antifreeze • Windshield washer fluid • Diesel exhaust fluid (DEF)	• 45 ft (14 m) – DEF only • 50 ft (15 m)	No	221-222
SDX™ 10 / 20 Series	• Car dealerships • Light-/medium-duty truck dealers • Fleet maintenance • Public works garages • Construction vehicle maintenance • Light-utility service trucks	• Petroleum- and synthetic-based oils • Air • Water • Grease • Antifreeze • Windshield washer fluid	• 35 ft (11 m) • 50 ft (15 m) • 65 ft (20 m)	Optional	223-228
SD™ Series Cord Reels	• Automotive dealerships • Fast lube centers • Service shops • Heavy-duty dealerships • Fleet services facilities • In-plant • Lube trucks • Mining	–	• 35 ft (11 m) • 50 ft (15 m) • 95 ft (29 m)	Optional	229-232
XDX™ 10 / 20 Series	• Heavy-duty truck dealers • Fleet maintenance • Mining maintenance • Public works garage • Construction vehicle maintenance • Heavy-duty mobile service trucks • Mining • Lube trucks	• Petroleum- and synthetic-based oils • Air • Water • Grease • Antifreeze • Windshield washer fluid	• 35 ft (11 m) • 50 ft (15 m) • 65 ft (20 m)	Optional	233-237
XD™ 30 Series	• Heavy-duty truck dealers • Fleet maintenance • Mining maintenance • Public works garage • Construction vehicle maintenance • Heavy-duty mobile service trucks • Mining • Lube trucks	• Petroleum- and synthetic-based oils • Diesel fuel • Air • Water • Grease • Antifreeze • Windshield washer fluid • Pressure wash • Waste oil evacuation • Diesel exhaust fluid (DEF)	• 35 ft (11 m) • 50 ft (15 m) • 65 ft (20 m) • 75 ft (23 m)	No	238-242
XD™ 40 / 50 Series	• Heavy-duty truck dealers • Fleet maintenance • Mining maintenance • Public works garages • Construction vehicle maintenance • Heavy-duty mobile service trucks • Agriculture • Lube trucks	• Petroleum- and synthetic-based oils • Diesel fuel • Air • Water • Antifreeze • Waste oil evacuation	• 35 ft (11 m) • 50 ft (15 m) • 75 ft (23 m) • 100 ft (30 m)	No	243-248
XD™ 60 / 70 / 80 Series	• Heavy-duty truck dealers • Fleet maintenance • Mining maintenance • Public works garages • Construction vehicle maintenance • Heavy-duty mobile service trucks • Agriculture • Lube trucks	• Petroleum- and synthetic-based oils • Diesel fuel • Air • Water • Grease • Waste oil evacuation	• 50 ft (15 m) • 75 ft (23 m) • 100 ft (30 m) • 150 ft (46 m)	No	250-259

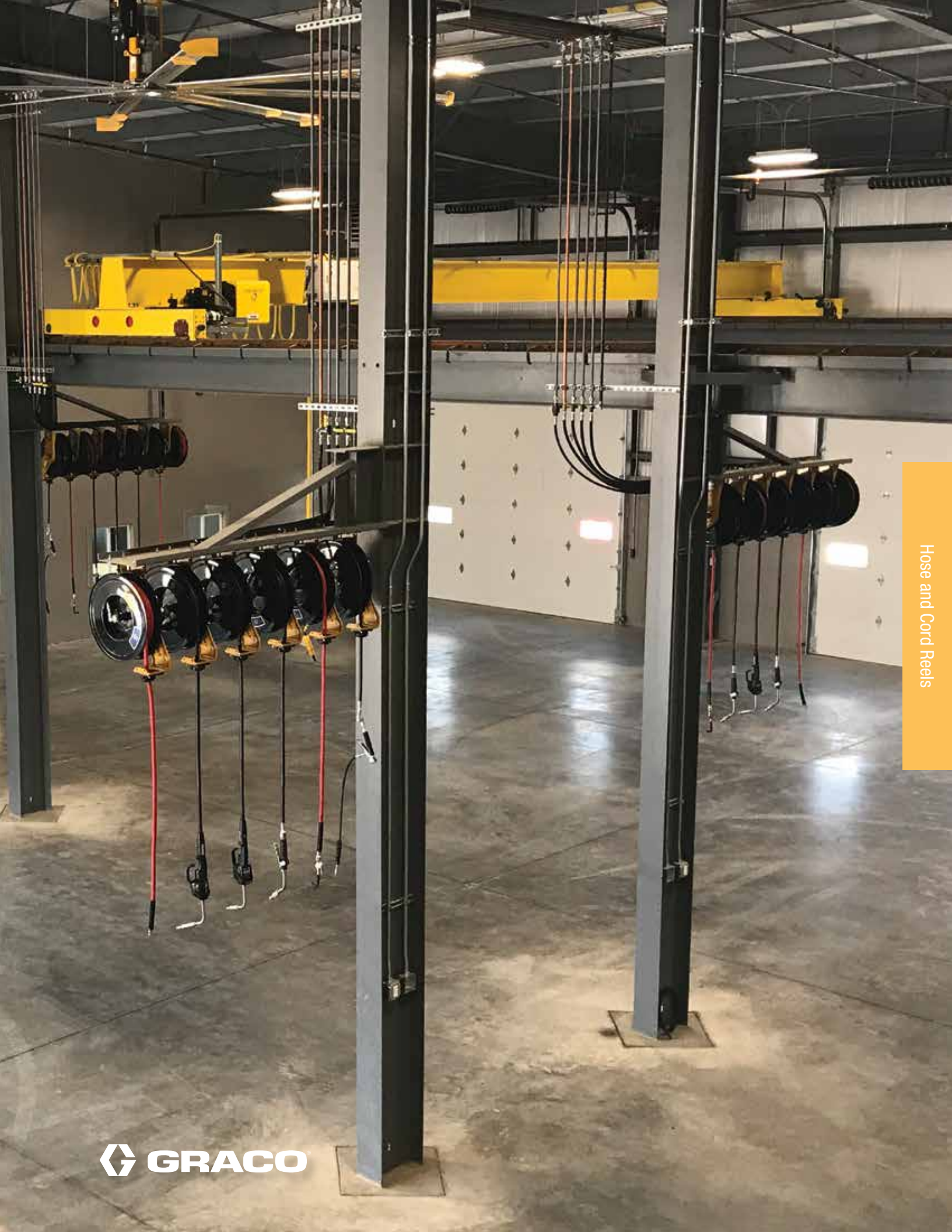

Hose and Cord Reels

GRACO

LD Series Enclosed Hose Reels

Oil | Gear Lube | ATF | Grease | Air | Water | Antifreeze | Washer Fluid

5 Year Warranty!

Economical Enclosed Hose Reels Get You Up and Running Fast

Reduce clutter and increase workplace safety with a Graco one-piece enclosed hose reel. Designed for light-duty applications in dealerships, service garages, collision repair and industrial manufacturing facilities.

Large Fluid Porting

Maximizes fluid flow with minimal pressure drop

Simple Spring Tension Adjustment

Ability to increase or decrease spring tension while reel is pressurized

Multiple Mounting Options

Wall, overhead, bench, or tank configurations (wall mount pictured)

Full Enclosure

Tough, dent-proof, corrosion-resistant enclosure

Typical Applications

- Small maintenance shops
- Tire maintenance shops
- Small fast lubes
- Independent repair facilities
- Industrial manufacturing facilities

Typical Fluids Handled

- Petroleum- and synthetic-based oils (motor, gear and ATF)
- Air
- Water
- Grease
- Antifreeze
- Windshield washer fluid

Dimensions

A	7.1 in (180 mm)
B	23.0 in (585 mm)
C	18.5 in (470 mm)
D	25.6 in (650 mm)

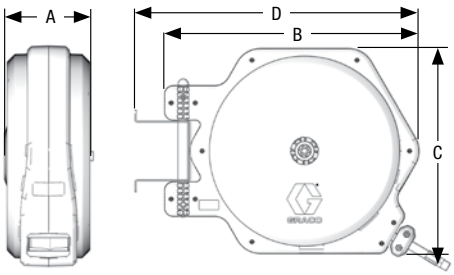

Technical Specifications

Operating Temperature Range	
Air-Only Reels	14°F to 140°F (-10°C to 60°C)
Water Applications	32°F to 140°F (0°C to 60°C)
All-Other Applications	0°F to 140°F (-18°C to 60°C)
Wetted Parts	
Air Only Reels	Aluminum, Buna-N rubber, PVC
Air/Water/Antifreeze/Windshield Washer Fluid Reels	Aluminum, Buna-N rubber
Oil Reels	Carbon steel, Buna-N rubber, PTFE
Grease Reels	Carbon steel, Buna-N rubber
Sound Pressure Level	69.3 dB(A)
Sound Power Level	75.3 dB(A)
Instruction Manual	313938

Ordering Information

LD Series Reel Packages

Includes hose with ball stop kit and hose guide, mounting bracket and hose inlet kit.

Type of Mount	Fluid	Hose		Connection Size		Maximum Pressure psi (bar)	Package Part Number	Package Includes		
		ID in (mm)	Length ft (m)	Inlet in (mm)	Outlet in (mm)			Reel Assembly	Mount Kit	Inlet Kit
Overhead/Wall Swivel Mount	Air/Water/ Antifreeze/ Windshield Washer Fluid	3/8 (10)	35 (11)	1/2 (13)	3/8 (10)	250 (17.2)	24F737	24H657	24G866	24C444
		3/8 (10)	50 (15)	1/2 (13)	3/8 (10)	250 (17.2)	24F738	24H658		
		1/2 (13)	35 (11)	1/2 (13)	1/2 (13)	250 (17.2)	24F739	24H659		
		1/2 (13)	50 (15)	1/2 (13)	1/2 (13)	250 (17.2)	24F740	24H660		
	Oil	3/8 (10)	35 (11)	1/2 (13)	3/8 (10)	1,800 (124)	24F741	24H661		24C537
		1/2 (13)	35 (11)	1/2 (13)	1/2 (13)	1,800 (124)	24F742	24H662		24C538
	Grease	1/4 (6)	35 (11)	3/8 (10)	1/4 (6)	5,000 (345)	24F743	24H663		24C539
Overhead/Wall Stationary Mount	Air/Water/ Antifreeze/ Windshield Washer Fluid	3/8 (10)	35 (11)	1/2 (13)	3/8 (10)	250 (17.2)	24F755	24H657	24G865	24C444
		3/8 (10)	50 (15)	1/2 (13)	3/8 (10)	250 (17.2)	24F756	24H658		
		1/2 (13)	35 (11)	1/2 (13)	1/2 (13)	250 (17.2)	24F757	24H659		
		1/2 (13)	50 (15)	1/2 (13)	1/2 (13)	250 (17.2)	24F758	24H660		
	Oil	3/8 (10)	35 (11)	1/2 (13)	3/8 (10)	1,800 (124)	24F759	24H661		24C537
		1/2 (13)	35 (11)	1/2 (13)	1/2 (13)	1,800 (124)	24F760	24H662		24C538
	Grease	1/4 (6)	35 (11)	3/8 (10)	1/4 (6)	5,000 (345)	24F761	24H663		24C539
Bench Swivel Mount	Air/Water/ Antifreeze/ Windshield Washer Fluid	3/8 (10)	35 (11)	1/2 (13)	3/8 (10)	250 (17.2)	24F773	24H657	24C772	24C444
		3/8 (10)	50 (15)	1/2 (13)	3/8 (10)	250 (17.2)	24F774	24H658		
		1/2 (13)	35 (11)	1/2 (13)	1/2 (13)	250 (17.2)	24F775	24H659		
		1/2 (13)	50 (15)	1/2 (13)	1/2 (13)	250 (17.2)	24F776	24H660		
	Oil	3/8 (10)	35 (11)	1/2 (13)	3/8 (10)	1,800 (124)	24F777	24H661		24C537
		1/2 (13)	35 (11)	1/2 (13)	1/2 (13)	1,800 (124)	24F778	24H662		24C538
	Grease	1/4 (6)	35 (11)	3/8 (10)	1/4 (6)	5,000 (345)	24F779	24H663		24C539

Oil | Gear Lube | ATF | Grease | Air | Water | Antifreeze | Washer Fluid

Ordering Information

LD Series Reel

Includes hose. Mounting hardware and hose inlet kit sold separately.

Fluid	Hose		Connection Size		Maximum Pressure psi (bar)	Part Number	Hose Inlet Kit (order separately)
	ID in (mm)	Length ft (m)	Inlet in (mm)	Outlet in (mm)			
Air/Water/ Antifreeze/ Windshield Washer Fluid	3/8 (10)	35 (11)	1/2 (13)	3/8 (10)	250 (17.2)	24H657	24C444
	3/8 (10)	50 (15)	1/2 (13)	3/8 (10)	250 (17.2)	24H658	24C444
	1/2 (13)	35 (11)	1/2 (13)	1/2 (13)	250 (17.2)	24H659	24C444
	1/2 (13)	50 (15)	1/2 (13)	1/2 (13)	250 (17.2)	24H660	24C444
Oil	3/8 (10)	35 (11)	1/2 (13)	3/8 (10)	1,800 (124)	24H661	24C537
	1/2 (13)	35 (11)	1/2 (13)	1/2 (13)	1,800 (124)	24H662	24C538
Grease	1/4 (6)	35 (11)	3/8 (10)	1/4 (6)	5,000 (345)	24H663	24C539

Hose Inlet Kits

A hose inlet kit is included in LD reel packages but must be ordered separately with standalone LD reel assemblies.

Fluid Type	Maximum Working Pressure psi (bar)	Size In (mm)	Inlet Configuration	Outlet Configuration	Part Number	Used with Hose Reel Model
Air Only	250 (17.2)	1/4 (6)	1/4 NPT(M)	1/4 NPT(M)	24C443	24H655 / 24H656
Air/Water		3/8 (10)	1/2 NPT(M)	3/8 NPT(M)	24C444	24H657 / 24H658
		1/2 (13)	1/2 NPT(M)	1/2 NPT(M)		24H659 / 24H660
Oil	1,800 (124)	3/8 (10)	1/2 NPT(M)	1/2 NPT(M)	24C537	24H661
		1/2 (13)	1/2 NPT(M)	1/2 NPT(M)	24C538	24H662
Grease	5,000 (345)	1/4 (6)	1/4 NPT(M)	1/4 NPT(M)	24C539	24H663

The Ultimate Industrial-Grade Hose Reel

Designed with an all-metal frame and specially crafted components; Graco LDX hose reels ensure smooth release and retraction to optimize confidence in cost-conscious smaller garages, independent repair facilities and industrial manufacturing environments.

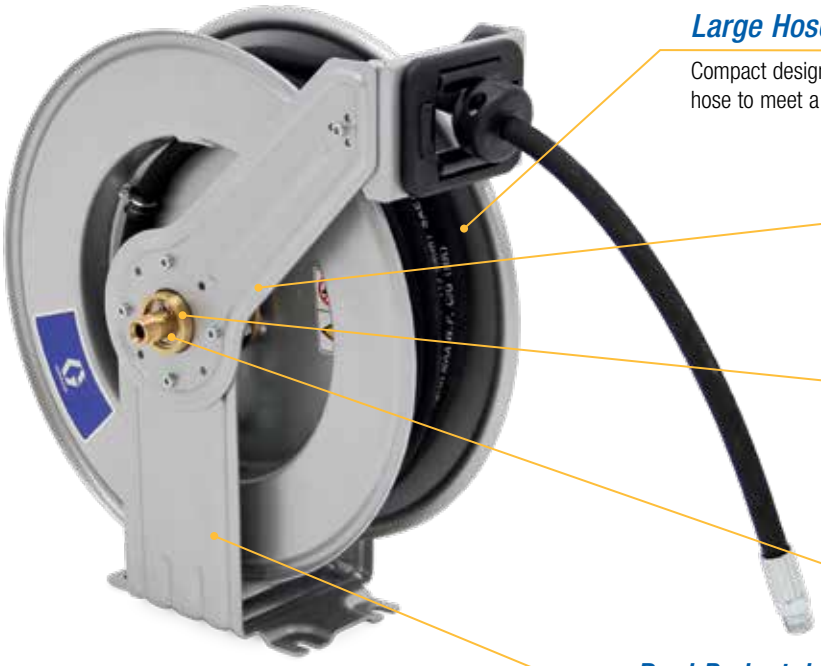

Large Hose Capacity with Small Profile

Compact design accommodates up to a 50 foot (15 meter) hose to meet a wide variety of application requirements.

Adjustable Arm

Easily change to one of six arm positions to fit your application.

Ball Bearing Swivel

Swivel designed with internal ball bearings reduces friction and ensures smooth operation.

External Swivel Housing

Quickly access swivel seal for faster repairs.

Dual Pedestal Frame

Ribbed metal for increased stability and robustness.

Typical Applications

- Industrial manufacturing facilities
- Small maintenance shops
- Tire maintenance shops
- Small fast lubes
- Independent repair facilities

Typical Fluids Handled

- Petroleum- and synthetic-based oils (motor, gear and ATF)
- Air
- Water
- Grease
- Antifreeze
- Windshield washer fluid
- Diesel exhaust fluid (DEF)

Technical Specifications

Operating Temperature Range	
Air/Water/Antifreeze/Windshield Washer Fluid	14.5°F to 149°F (-26°C to 65°C)
DEF	-40°F to 158°F (-40°C to 70°C)
Oil	-40°F to 212°F (-40°C to 100°C)
Grease	-40°F to 212°F (-40°C to 100°C)
Wetted Parts	
Air/Water/Antifreeze/Windshield Washer Fluid Reels	EPDM, stainless steel, fluorocarbon (FKM)
DEF Reels	Hybrid polymer, brass, nitrile rubber
Oil Reels	Zinc-plated steel, brass, polyurethane, nitrile rubber
Grease Reels	Zinc-plated steel, brass, nitrile rubber
Sound Pressure Level	80 dB(A)
Sound Power Level	87 dB(A)
Instruction Manual	3A8216

LDX Series Hose Reels

Oil | Gear Lube | ATF | Grease | Air | Water | Antifreeze | Washer Fluid | Diesel Exhaust Fluid (DEF)

Dimensions

A	3.5 in (89 mm)
B	7.5 in (191 mm)
C	4.9 in (125 mm)
D	8.7 in (221 mm)
E	19.0 in (483 mm)
F	9.4 in (239 mm)
G	17.5 in (445 mm)

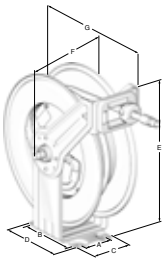

Typical Mounting Configurations

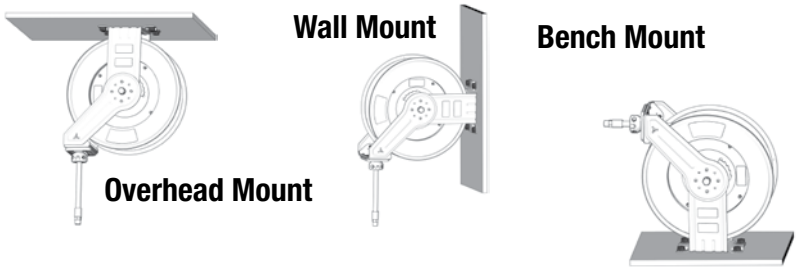

Ordering Information

LDX Reels

Part Number	Fluid	Hose		Connection Size		Maximum Pressure PSI
		ID (in)	Length (ft)	Inlet (in)	Outlet (in)	
HEL010	Air/Water/Antifreeze/Windshield Washer Fluid	3/8	50	3/8 NPT	3/8 NPT	300
HEL015	DEF	1/2	45	1/2 BSPT	1/2 BSPT	150
HEM004	Oil	1/2	50	1/2 NPT	1/2 NPT	1,500
HEH006	Grease	3/8	50	3/8 NPT	3/8 NPT	4,060

Inlet Kits

Part Number	Fluid
25U369	Air/Water/Antifreeze/Windshield Washer Fluid
25U370	DEF
25U371	Oil
25U372	Grease

Accessories

Part Number	Description
18F444	1/2 in BSPT to 3/4 in hose barb adapter
18F445	1/2 in to 3/4 in adapter, BSPT

7 Year Warranty!

High-Quality Performance and Versatility

Improve performance along with the look of any environment with Graco's flagship SDX hose reel. Built with specially crafted components, including a rigid metal frame and spool and effortless retraction swivels, it's available in five colors. An easy-to-service swivel cartridge design simplifies maintenance. Retraction and recoil are uniform and consistent every time.

Reel arm shown in tank/bench mount position.

Adjustable Arm

Easily change to one of six arm positions to fit your application.

Durable Finish

Baked-on enamel finish (five colors available) protects reel from corrosion.

Large Hose Capacity with Small Profile

Compact pedestal and spool fits into tight spaces and can accommodate 35-65 foot (10.7-19.8 meters) hose (NPT air/water) capacity for a wide variety of applications.

Heavy-Duty Spring

Powerful retraction performance ensures recoils are uniform and consistent every time.

Full-Flow Swivel

Maximize material flow with minimal pressure drop for faster fills to get more vehicles through your shop.

Low-Friction Cartridge Swivel

Provides smooth reel performance with an easy-to-replace swivel cartridge, simplifying repairs.

Typical Applications

- Car dealerships
- Light-/medium-duty truck dealers
- Fleet maintenance
- Public works garages
- Construction vehicle maintenance
- Light-utility service trucks

Typical Fluids Handled

- Petroleum- and synthetic-based oils (motor, gear and ATF)
- Air
- Water
- Grease
- Antifreeze/coolant
- Windshield washer fluid

Technical Specifications

Operating Temperature Range	
Air/Water/Antifreeze/Windshield Washer Fluid Reels	-20°F to 190°F (-28°C to 87°C)
Oil Reels	-20°F to 190°F (-28°C to 87°C)
Grease Reels	-40°F to 200°F (-40°C to 93°C)
Wetted Parts	
Air/Water/Antifreeze/Windshield Washer Fluid Reels	Zinc-plated steel, stainless steel, anodized aluminum, nitrile rubber
Oil Reels	Zinc-plated steel, anodized aluminum, nitrile rubber
Grease Reels	Zinc-plated steel, nitrile rubber, steel
Weight	52 lb (23.5 kg)
Sound Pressure Level	80 dB(A)
Sound Power Level	87 dB(A)
Instruction Manual	3A8626

SDX Series Hose Reels

Oil | Gear Lube | ATF | Grease | Air | Water | Antifreeze | Washer Fluid

Dimensions

	SDX 10	SDX 20
A	7.0 in (177 mm)	7.0 in (177 mm)
B	16.2 in (412 mm)	18.1 in (460 mm)
C	21.0 in (533 mm)	23.4 in (594 mm)
D	17.1 in (435 mm)	19.2 in (488 mm)
E	19.5 in (495 mm)	21.8 in (554 mm)
F	22.5 in (571 mm)	25.2 in (640 mm)

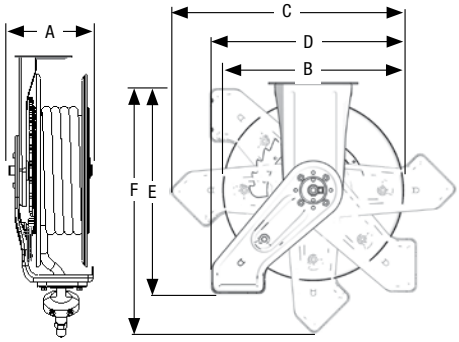

Typical Mounting Configurations

Overhead Mount

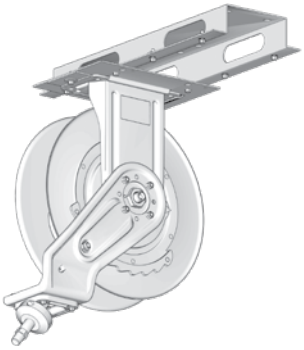

Wall Mount

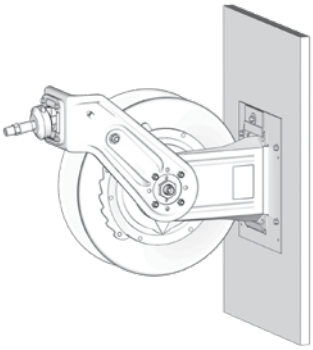

Bench/ Truck Mount

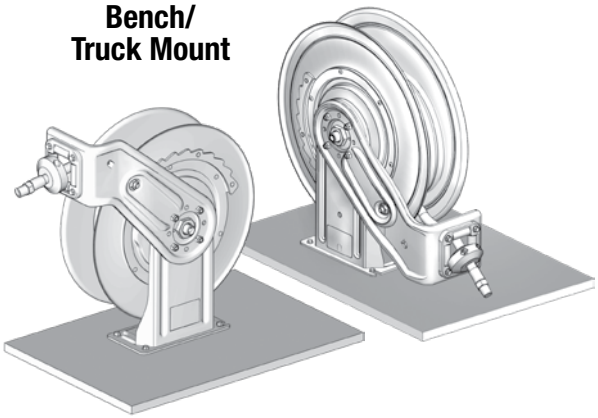

Available in 5 Colors
Consult factory for lead times.

Metallic Blue (B)

Yellow (F)

Black (D)

Red (C)

White (A)

Ordering Information

SDX 10/20 Reel Assembly Ordering Guide

SDX Series reels are available in five colors. Use the chart below to determine the correct part number to order. The last character of each part number indicates the hose reel color.

Reel Color	Identifier
White	A
Metallic Blue	B
Red	C
Black	D
Yellow	F

Order Example: Arm in overhead mount position, SDX 20, oil, 1/2 in ID hose, 50 ft hose length

1 Select your reel position: SDM65#

2 Select your reel color: (from Reel Assembly Ordering Guide – opposite) Metallic Blue = "B"

Order Part Number: SDM65B

Arm in Overhead Mount Position

Assembled with hose, ball stop kit and roller guide. ***Required hose inlet kit sold separately.***

Reel Size	Fluid	Hose		Connection Size		Maximum Pressure psi (bar)	Assembly Part Number	Recommended Hose Inlet Kit
		ID in (mm)	Length ft (m)	Inlet in (mm)	Outlet in (mm)			
SDX 10	Air/Water/ Antifreeze/ Windshield Washer Fluid	3/8 (10)	35 (11)	1/2 (13)	3/8 (10)	300 (20.7)	SDL23#	218549
		3/8 (10)	50 (15)	1/2 (13)	3/8 (10)	300 (20.7)	SDL25#	
		1/2 (13)	35 (11)	1/2 (13)	1/2 (13)	300 (20.7)	SDL33#	
SDX 20		3/8 (10)	65 (20)	1/2 (13)	3/8 (10)	300 (20.7)	SDL56#	
		1/2 (13)	50 (15)	1/2 (13)	1/2 (13)	300 (20.7)	SDL65#	
SDX 10	Oil	1/2 (13)	35 (11)	1/2 (13)	1/2 (13)	2,000 (138)	SDM33#	
SDX 20		1/2 (13)	50 (15)	1/2 (13)	1/2 (13)	2,000 (138)	SDM65#	
SDX 10	Grease	1/4 (6)	50 (15)	3/8 (10)	1/4 (6)	5,000 (345)	SDH15#	218550
		3/8 (10)	35 (11)	3/8 (10)	1/4 (6)	4,800 (331)	SDH23#	
SDX 20		3/8 (10)	50 (15)	3/8 (10)	1/4 (6)	4,800 (331)	SDH55#	

Arm in Tank/Bench Mount Position

Assembled with hose, ball stop kit and roller guide. ***Required hose inlet kit sold separately.***

Reel Size	Fluid	Hose		Connection Size		Maximum Pressure psi (bar)	Assembly Part Number	Recommended Hose Inlet Kit
		ID in (mm)	Length ft (m)	Inlet in (mm)	Outlet in (mm)			
SDX 20	Air/Water/ Antifreeze/ Windshield Washer Fluid	3/8 (10)	65 (20)	1/2 (13)	3/8 (10)	300 (20.7)	SDL5J#	218549
		1/2 (13)	50 (15)	1/2 (13)	1/2 (13)	300 (20.7)	SDL6H#	
	Oil	1/2 (13)	50 (15)	1/2 (13)	1/2 (13)	2,000 (138)	SDM6H#	
	Grease	3/8 (10)	50 (15)	3/8 (10)	1/4 (6)	4,800 (331)	SDH5H#	218550

Oil | Gear Lube | ATF | Grease | Air | Water | Antifreeze | Washer Fluid

Ordering Information

Bare Reels

Arm in Overhead Mount Position

Required hose inlet kit sold separately. Fluid hose not included.

Reel Size	Fluid	Hose (Not Included)		Connection Size		Maximum Pressure psi (bar)	Assembly Part Number	Recommended Hose Inlet Kit
		ID in (mm)	Length ft (m)	Inlet in (mm)	Outlet in (mm)			
SDX 10	Air/Water/ Antifreeze/ Windshield Washer Fluid	3/8 (10)	50 (15)	1/2 (13)	3/8 (10)	300 (20.7)	SDL2D#	218549
		1/2 (13)	35 (11)	1/2 (13)	3/8 (10)	300 (20.7)	SDL2D#	
SDX 20		3/8 (10)	65 (20)	1/2 (13)	1/2 (13)	300 (20.7)	SDL6D#	
		1/2 (13)	50 (15)	1/2 (13)	1/2 (13)	300 (20.7)	SDL6D#	
SDX 10	Oil	1/2 (13)	35 (11)	1/2 (13)	1/2 (13)	2,000 (138)	SDM3B#	
SDX 20		1/2 (13)	50 (15)	1/2 (13)	1/2 (13)	2,000 (138)	SDM6D#	
SDX 10	Grease	1/4 (6)	50 (15)	3/8 (10)	3/8 (10)	5,000 (345)	SDH1D#	218550
		3/8 (10)	35 (11)	3/8 (10)	3/8 (10)	5,000 (345)	SDH1D#	
SDX 20		3/8 (10)	50 (15)	3/8 (10)	3/8 (10)	5,000 (345)	SDH5D#	

SDX 10 Oil Reel Packages

	Reel Size	Fluid	Valve Type	Enclosure	Package Number	Package Includes			
						Reel Assembly	Enclosure	Hose Inlet Kit	Meter
	SDX 10	Oil	SDM8 Manual Meter with Rigid Extension	No	24E001	SDM33B	–	218549	25M404
				Yes	24D996	SDM33B	24A217	218549	25M404
			SDM8 Manual Meter with Flexible Extension	No	24E002	SDM33B	–	218549	25M406
				Yes	24D997	SDM33B	24A217	218549	25M406
			None	Yes	24D995	SDM33B	24A217	218549	–

Ordering Information

SDX 10 Air/Water Reel Packages

	Reel Size	Fluid	Valve Type	Enclosure	Package Number	Package Includes				
						Reel Assembly	Enclosure	Hose Inlet Kit	Valve	Fitting
	SDX 10	Water	Water Bib Dispense Valve	No	24D999	SDL23B	–	218549	180685	150287
				Yes	24D993	SDL23B	24A217	218549	180685	150287
					24D994	SDL33B	24A217	218549	180685	159842
		Air	Tire Chuck Valve	No	24D998	SDL23B	–	218549	218545	–
				Yes	24D992	SDL23B	24A217	218549	218545	–
		Air/Water	None	Yes	24D989	SDL23B	24A217	218549	–	–
					24D990	SDL25B	24A217	218549	–	–
					24D991	SDL33B	24A217	218549	–	–

Accessories

Enclosure Kits for One Reel

Open mounting accommodates up to six reels. Includes all parts necessary to mount on wall or overhead. Requires mounting channel.

	Reel Size	White	Metallic Blue	Red	Black	Dark Blue	Yellow	Required End-Caps (set of 2)
	SDX 10	24A217	24A940	24A941	24A942	24A943	24A944	24A950
	SDX 20	24A218	24A945	24A946	24A947	24A948	24A949	24A951

Hose Inlet Kits

A hose inlet kit is required when ordering an SDX reel.

	Maximum Working Pressure psi (bar)	Size in (mm)	Length ft (m)	Part Number
	2,000 (137)	1/2 (13)	2 (0.6)	218549
	4,000 (276)	3/8 (10)		218550
	5,000 (345)	1/4 (6)		224417

Ball Stop Kits

SDX reel packages include ball stop kits. Items below are available for bare reels and as replacement parts.

	Hose Inner Diameter (ID) Size	Part Number
	1/4 in (6.4 mm)	222225
	1/4 in to 3/8 in (6.4 mm to 9.5 mm)	218340
	3/8 in to 1/2 in (9.5 mm to 12.7 mm)	218341
	5/8 in (15.9 mm)	237872

Oil | Gear Lube | ATF | Grease | Air | Water | Antifreeze | Washer Fluid

Ordering Information

Mounting Channels

Accommodates up to six reels. Includes all parts necessary to mount on wall or overhead.

	Description	1 Reel	2 Reels	3 Reels	4 Reels	5 Reels	6 Reels
	Enclosed Reel Mounting Channel	203521	203522	203523	203524	203525	203526
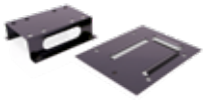	Open Reel Mounting Channel	24A934	24A935	24A936	24A937	24A938	24A939
	I-Beam Mounting Bracket*	204741 (x 2)			204741 (x 3)		

*Secures mounting channel to I-beam without drilling – 2 are required for 1-3 reels, and 3 are required for 4-6 reels.

Swivel Mounting Bracket

Allows reel to swivel 120° with two lockable positions.

	Part Number	Description
	24N444	Swivel mounting bracket for installing SDX 10 reels

Easy Slide-In Mount

Allows reel to slide in and out of mount for easy installation.

	Part Number	Description
	24H193	Overhead or wall slide-in mount for SDX 10 or SDX 20 reels

Retrofit Adapter Kits

	Part Number	Description
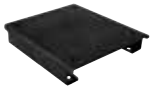	24C100	Includes all parts to mount an SDX 10 hose reel to an existing 250 series mounting pattern with enclosure

Hose Identification Wraps

Vinyl hose wrap for easy identification of meter fluid.

	Part Number	Description
	17S659	Red
	17S660	Blue
	17S661	Green
	17S662	Yellow
	17S663	White

Quality Cord and Light Reels

Organize your work space for a safer, more productive work environment. Make Graco your single source for your entire reel bank.

2 Year Warranty!

Durable Frame in Two Sizes

Choose from the heavy-duty steel construction of the SD Series 5 or 10.

Multiple Cord Lengths

Choose from 35, 50 and 95 foot (11, 15, 29 meter) options to fit your shop perfectly. Features a 5 foot lead-in cable.

Adjustable Arm

Easily change the arm position to fit more applications. Works on walls, overhead or bench mounts.

Heavy-Duty Pedestal

High-strength steel construction with rolled edges and ribbed stress points that won't flex or twist.

Multiple Configurations Available

Comes with or without receptacles so you can configure it for your specific needs. Light reels come in your choice of fluorescent or LED with optional tool tap receptacle.

UL/CSA Approved

Typical Applications

- Automotive dealerships
- Fast lube centers
- Service shops
- Heavy-duty dealerships
- Fleet services facilities
- In-plant
- Lube trucks
- Mining

Dimensions

	SD Series 5	SD Series 10
A	3.5 in (89 mm)	3.5 in (89 mm)
B	6.38 in (162 mm)	7.5 in (191 mm)
C	4.7 in (120 mm)	4.7 in (120 mm)
D	7.48 in (190 mm)	9 in (229 mm)
E	14.8 in (376 mm)	19.5 in (498 mm)
F	6.6 in (168 mm)	7 in (177 mm)
G	13.84 in (352 mm)	17.5 in (445 mm)

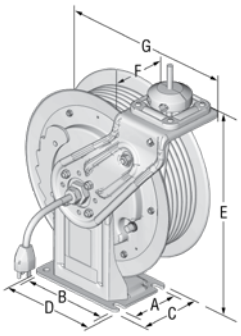

Technical Specifications

Operating Temperature Range			
Cord Reels			-22°F to 122°F (-30°C to 50°C)
Light Reels			-4°F to 104°F (-20°C to 40°C)
Weight without Accessories			
120V	SD 5	16 AWG, Length 35 ft	25.4 lb
120V	SD 5	16 AWG, Length 50 ft	27.6 lb
120V	SD 5	12 AWG, Length 35 ft	28.2 lb
120V	SD 5	12 AWG, Length 50 ft	32.0 lb
120V	SD 10	16 AWG, Length 95 ft	46.3 lb
120V	SD 10	12 AWG, Length 95 ft	51.8 lb
Instruction Manual			3A2592

Ordering Information

SD Cord and Light Reels – 120 Volt

120 volt cord and light reels have a black finish and are ETL approved to US and CSA standards.

Accessory	Reel Size	AWG	Amp	Cord Length	Insulation	Part Number
No Accessory – Cord Only	SD 5	12	20	50 ft (15 m)	SJOOW	24Y859
	SD 10	12	18	95 ft (29 m)	SJOOW	24Y880
	SD 5	16	13	50 ft (15 m)	SJTOW	24Y861
Single Industrial Receptacle	SD 5	12	20	35 ft (11 m)	SJOOW	24Y862
	SD 5	12	20	50 ft (15 m)	SJOOW	24Y863
	SD 10	12	18	95 ft (29 m)	SJOOW	24Y882
Tri-Plug GFCI Industrial Receptacle	SD 5	12	15	50 ft (15 m)	SJOOW	24Y864
	SD 10	12	15	95 ft (29 m)	SJOOW	24Y883
Fluorescent Light	SD 5	16	<1	35 ft (11 m)	SJTOW	24Y865
	SD 5	16	<1	50 ft (15 m)	SJTOW	24Y866
	SD 10	16	<1	95 ft (29 m)	SJTOW	24Y884
Fluorescent Light with Single Tool Tap Plug	SD 5	16	10	50 ft (15 m)	SJTOW	24Y868
LED Light	SD 5	16	<1	35 ft (11 m)	SJTOW	24Y869
	SD 5	16	<1	50 ft (15 m)	SJTOW	24Y870
	SD 10	16	<1	95 ft (29 m)	SJTOW	24Y886
LED Light with In-line Tool Tap	SD 5	16	12	35 ft (11 m)	SJTOW	24Y871
	SD 5	16	12	50 ft (15 m)	SJTOW	24Y872
	SD 10	16	10	95 ft (29 m)	SJTOW	24Y887

Accessory Ordering Information

Enclosure Kits

Includes an enclosure for one reel. A set of end-caps are required per single or bank of reels. Requires you to order Enclosed Reel Mounting Channel separately. For mounting SD 5 or SD 10 reels in size 20 enclosures, please see Adapter Kits on page 232.

Reel Size	White	Metallic Blue	Red	Black	Dark Blue	Yellow	Required End-Caps (set of 2)
SD 5 with size 10 enclosure	24N690	24N682	24N683	24N684	24N691	24N685	24A950
SD 10 with size 10 enclosure	24A217	24A940	24A941	24A942	24A943	24A944	24A950

Mounting Channels

Accommodates up to six reels. Includes all parts necessary to mount on wall or overhead.

Description	Reel Size	1 Reel	2 Reels	3 Reels	4 Reels	5 Reels	6 Reels
Enclosed Reel Mounting Channel	SD 5 and SD 10	203521	203522	203523	203524	203525	203526
Open Reel Mounting Channel	SD 5	24N674	24N675	–	–	–	–
	SD 10	24A934	24A935	24A936	24A937	24A938	24A939
I-Beam Mounting Bracket*	SD 5 and SD 10	204741 (x 2)			204741 (x 3)		

*Secures mounting channel to I-beam without drilling – 2 are required for 1-3 reels, and 3 are required for 4-6 reels.

SD Series Cord and Light Reel Accessories

Ordering Information

Swivel Mounting Bracket

Allows reel to swivel 120˚ with two lockable positions.

Reel Size	Part Number	Description
SD 5	24N814	Swivel mounting bracket for installation
SD 10	24N444	Swivel mounting bracket for installation

Wall/Overhead Mounting Bracket

Allows you to slide the reel in and out for easy installation.

Reel Size	Part Number	Description
SD 5	24N686	Wall/overhead easy mount plate kit
SD 10	24H193	Wall/overhead easy mount plate kit

Adapter Kits

Part Number	Description
24P164	Spacer bracket for mounting a size 5 reel to an existing size 10 enclosure
24P880	Spacer bracket for mounting a size 5 reel to an existing size 20 enclosure
24P881	Spacer bracket for mounting a size 10 reel to an existing size 20 enclosure
16N883	Clamping plate to mount a size 5 reel to an existing SD Series open channel

Hands-Free Magnetic Clip

Non-marring cover won't scratch vehicle finish. Snap onto light tube for hands-free operation.

Part Number	Description
16P999	Magnetic clip for light tube

7 Year Warranty!

Performance in the Most Demanding Applications

The heavy-duty XDX hose reels are designed to handle fluid delivery tasks in the harshest, most challenging environments. Built with specially crafted components to extend performance for many years, the hose reel includes a robust heavy-gauge, dual-pedestal metal frame; steel spool; sealed components; and unique swivel design to transport fluids consistently and safely without fail.

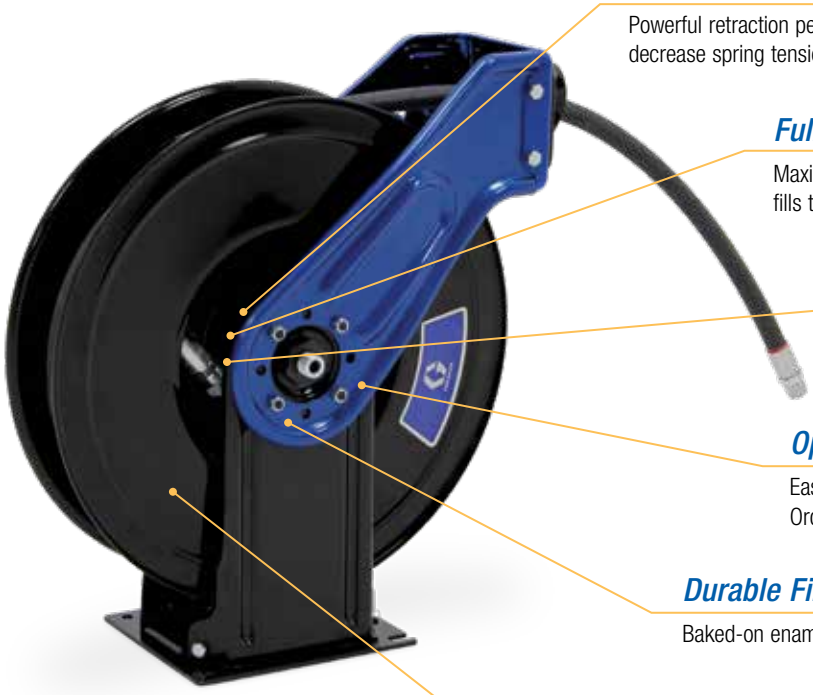

Heavy-Duty Adjustable Spring

Powerful retraction performance that allows you to easily increase or decrease spring tension while the reel is pressurized with fluid.

Full-Flow Swivel

Maximize material flow with minimal pressure drop for faster fills to get more vehicles through your shop.

Low-Friction Cartridge Swivel

Provides smooth reel performance with an easy-to-replace swivel cartridge, simplifying repairs.

Optional Adjustable Arm

Easily change to one of six arm positions to fit your application. Order with arm (XD models) or without (XN models).

Durable Finish

Baked-on enamel finish (four colors available) protects reel from corrosion.

Large Hose Capacity with Small Profile

Compact pedestal and spool fits into tight spaces and can accommodate 35-65 foot (10.7-19.8 meters) hose capacity for a wide variety of applications.

Typical Applications

- Heavy-duty truck dealers
- Fleet maintenance
- Mining maintenance
- Public works garage
- Construction vehicle maintenance
- Heavy-duty mobile service trucks
- Mining
- Lube trucks

Typical Fluids Handled

- Petroleum- and synthetic-based oils (motor, gear and ATF)
- Air
- Water
- Grease
- Antifreeze/coolant
- Windshield washer fluid

Technical Specifications

Operating Temperature Range	
Air/Water/Antifreeze/ Windshield Washer Fluid	-20°F to 190°F (-28°C to 87°C)
Oil	-20°F to 190°F (-28°C to 87°C)
Grease	-40°F to 200°F (-40°C to 93°C)
Wetted Parts	
Air/Water/Antifreeze/ Windshield Washer Fluid	Zinc plated steel, stainless steel, anodized aluminum, nitrile rubber
Oil	Zinc plated steel, anodized aluminum, nitrile rubber
Grease	Zinc plated steel, polyurethane, steel
Weight (Without Hose)	
HS Models (With Adjustable Arm)	59 lb (26.5 kg)
HN Models (Without Arm)	52 lb (23.5 kg)
Sound Pressure Level	78 dB(A)
Sound Power Level	88 dB(A)
Instruction Manual	3A8626

XDX Series Hose Reels

Oil | Gear Lube | ATF | Grease | Air | Water | Antifreeze | Washer Fluid

10 / 20 / 20 XN

Dimensions

	XD Models (With Adjustable Arm)		XN Models (Without Arm)
	XDX 10	XDX 20	XDX 20
A	7.5 in (196 mm)	7.5 in (196 mm)	7.5 in (196 mm)
B	16.2 in (412 mm)	18.1 in (460 mm)	18.1 in (460 mm)
C	21.0 in (533 mm)	23.4 in (594 mm)	23.4 in (594 mm)
D	18.0 in (457 mm)	20.0 in (508 mm)	20.0 in (508 mm)
E	18.5 in (470 mm)	21.0 in (533 mm)	–
F	22.5 in (571 mm)	25.2 in (640 mm)	–

XD Models

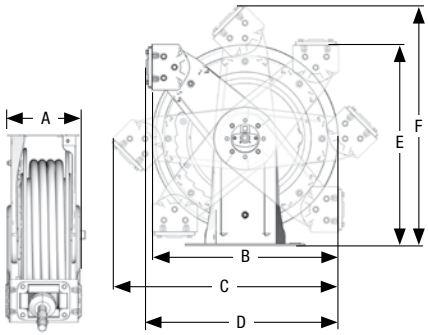

XN Models

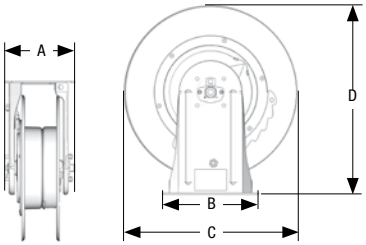

Typical Mounting Configurations

Overhead Mount

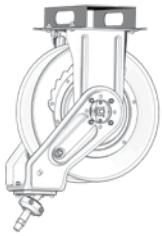

Wall Mount

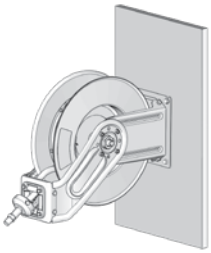

Bench/ Truck Mount

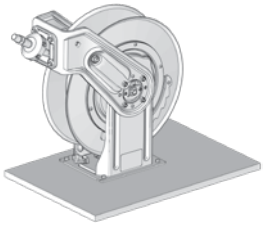

Truck Mount with Remote Mounted Roller Guide

Available in 4 Colors
Consult factory for lead times.

Metallic Blue (B)

Yellow (F)

Black (D)

White (A)

Ordering Information

XDX 10/20 Reel Assembly Ordering Guide

XDX Series reels are available in three colors. Use the chart below to determine the correct part number to order. The last character of each part number indicates the hose reel color.

Reel Color	Identifier
White	A
Metallic Blue	B
Black	D
Yellow	F

Order Example: Arm in bench/truck mount position, XDX 20, oil, 1/2 in ID hose, 50 ft hose length

1 Select your reel position: XDM65#

2 Select your reel color: (from Reel Assembly Ordering Guide – opposite) Black = "D"

Order Part Number: XDM65D

XD Models (with Adjustable Arm)

Reel Assemblies

Assembly includes hose, ball stop kit and roller guide. ***Required hose inlet kit sold separately.***

Reel Size	Fluid	Hose (Included) ID in (mm)	Hose (Included) Length ft (m)	Connection Size Inlet	Connection Size Outlet	Maximum Pressure psi (bar)	Assembly Part Number	Recommended Hose Inlet Kit
XDX 10	Air/Water/Antifreeze/ Windshield Washer Fluid	3/8 (10)	50 (15)	1/2 NPSM(M)	3/8 NPT(M)	300 (20.7)	XDL25#	218549
		1/2 (13)	35 (11)	1/2 NPSM(M)	1/2 NPT(M)	300 (20.7)	XDL33#	
	Oil	1/2 (13)	35 (11)	1/2 NPSM(M)	1/2 NPT(M)	2,000 (138)	XDM33#	
	Grease	1/4 (6)	50 (15)	3/8 NPSM(M)	1/4 NPT(M)	5,000 (552)	XDH15#	218550
XDX 20	Air/Water/Antifreeze/ Windshield Washer Fluid	3/8 (10)	65 (20)	1/2 NPSM(M)	3/8 NPT(M)	300 (20.7)	XDL56#	218549
		1/2 (13)	50 (15)	1/2 NPSM(M)	1/2 NPT(M)	300 (20.7)	XDL65#	
	Oil	1/2 (13)	50 (15)	1/2 NPSM(M)	1/2 NPT(M)	2,000 (138)	XDM65#	
	Grease	3/8 (10)	50 (15)	3/8 NPSM(M)	1/4 NPT(M)	4,800 (331)	XDH55#	218550

Bare Reels

Required hose inlet kit sold separately. Fluid hose not included.

Reel Size	Fluid	Hose (Not Included) ID in (mm)	Hose (Not Included) Length ft (m)	Connection Size Inlet	Connection Size Outlet	Maximum Pressure psi (bar)	Part Number	Recommended Hose Inlet Kit
XDX 10	Air/Water/Antifreeze/ Windshield Washer Fluid	3/8 (10)	65 (20)	1/2 NPSM(M)	3/8 NPSM(F)	300 (20.7)	XDL2D#	218549
	Oil	1/2 (13)	35 (11)	1/2 NPSM(M)	1/2 NPSM(F)	2,000 (138)	XDM3B#	
	Grease	3/8 (10)	35 (11)	3/8 NPSM(M)	3/8 NPSM(F)	8,000 (552)	XDH1D#	218550
XDX 20	Air/Water/Antifreeze/ Windshield Washer Fluid	1/2 (13)	50 (15)	1/2 NPSM(M)	1/2 NPSM(F)	300 (20.7)	XDL6D#	218549
	Oil	1/2 (13)	50 (15)	1/2 NPSM(M)	1/2 NPSM(F)	2,000 (138)	XDM6D#	
	Grease	3/8 (10)	50 (15)	3/8 NPSM(M)	3/8 NPSM(F)	8,000 (552)	XDH5D#	218550

XDX Series Hose Reels

Oil | Gear Lube | ATF | Grease | Air | Water | Antifreeze | Washer Fluid

10 / 20 / 20 XN

Ordering Information

XN Models (without Adjustable Arm)

Includes hose guide kit. ***Required hose inlet kit sold separately.***

Reel Size	Fluid	Hose (Included)		Connection Size		Maximum Pressure psi (bar)	Part Number	Hose Guide Kit (Included)	Recommended Hose Inlet Kit
		ID in (mm)	Length ft (m)	Inlet	Outlet		Black		
XDX 20	Air/Water/ Antifreeze/ Windshield Washer Fluid	3/8 (10)	65 (20)	1/2 NPSM(M)	3/8 NPT(M)	300 (20.7)	XNL56D	15Y478	218549
		1/2 (13)	50 (15)	1/2 NPSM(M)	1/2 NPT(M)	300 (20.7)	XNL65D		
	Oil	1/2 (13)	50 (15)	1/2 NPSM(M)	1/2 NPT(M)	2,000 (138)	XNM65D		
	Grease	3/8 (10)	50 (15)	3/8 NPSM(M)	1/4 NPT(M)	4,800 (331)	XNH55D		218550

Accessories

Ball Stop Kits

XDX HS models include ball stop kits. Order separately if ordering a bare reel or if needed with HN models.

Part Number	Description
222225	For 1/4 in (6 mm) ID hose (not compatible with XD 30, 700 or 750)
218340	For 1/4 in to 3/8 in (6 mm to 10 mm) ID hose (not for use with XD 30, 700 or 750)
218341	0.782 in ID used for 3/8 in and 1/2 in (10 mm and 13 mm) hose (not compatible with XD 30, 700 or 750)
237872	1.0 in ID used for 5/8 in (16 mm) hose
237873	1.123 in ID used for 3/4 in (19 mm) hose
237874	1.374 in ID used for 1 in (25 mm) hose
24D132	For 3/8 in (10 mm) ID hose
24D133	For 1/2 in (13 mm) ID hose

Hose Inlet Kits

A hose inlet kit is required when ordering an XDX reel.

Maximum Working Pressure psi (bar)	Size in (mm)	Length ft (m)	Part Number
2,000 (137)	1/2 (13)	2 (0.6)	218549
4,000 (276)	3/8 (10)		218550
5,000 (345)	1/4 (6)		224417

Mounting Channels

Accommodates up to six reels. Includes all parts necessary to mount on wall or overhead.

	Description	1 Reel	2 Reels	3 Reels	4 Reels	5 Reels	6 Reels
	Enclosed Reel Mounting Channel	24N323	24N324	24N325	24N326	24N327	24N328
	Open Reel Mounting Channel	24A219	24A220	24A221	24A222	24A222	24A222
	I-Beam Mounting Bracket*	204741 (x 2)			204741 (x 3)		

*Secures mounting channel to I-beam without drilling – 2 are required for 1-3 reels, and 3 are required for 4-6 reels.

Ordering Information

Enclosure Kits for One Reel

Open mounting accommodates up to six reels. Includes all parts necessary to mount on wall or overhead. Requires Enclosed Reel Mounting Channel.

Reel Size	White	Metallic Blue	Red	Black	Dark Blue	Yellow	Required End-Caps (set of 2)
XDX 10	24N331	24N332	24N333	24N334	24N335	24N336	24A950
XDX 20	24N337	24N339	24N340	24N341	24N342	24N343	24A951

Retrofit Adapter Kit

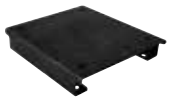

Part Number	Description
24A224	Includes all parts to mount hose reel to existing 500 series mounting pattern without enclosure
24P914	Includes all parts to convert XDX 20 hose reels to fit existing 500 series enclosures

Valve Hanger Kit

Part Number	Description
224444	Mounts to side of reel to allow hanging of non-metered and high-flow dispensing valves

Self-Adhesive Identification Label Set

Part Number	Description
180698	Set includes: 1 in x 5 in (25.4 mm x 127 mm) hose reels labels for Antifreeze, Water, SAE 5-40, SAE 10-40, SAE 20W, Hydraulic, Gear, SAE 10W, SAE 10-30, SAE 30W, Dexron, Air, Chassis, ATF

Hose Identification Wraps

Vinyl hose wrap for easy identification of meter fluid.

Part Number	Description
17S659	Red
17S660	Blue
17S661	Green
17S662	Yellow
17S663	White

Oil | Gear Lube | ATF | Grease | Fuel | Pressure Wash | Air | Water | Antifreeze | Washer Fluid | Oil/ Waste Oil | Diesel Exhaust Fluid (DEF)

30 / 30 HN

7 Year Warranty!

High Capacity Reel

Used in applications requiring longer-range dispense and higher capacity than the standard XDX 10/20 series. Ideal for use on mobile service trucks, heavy construction and industrial plants.

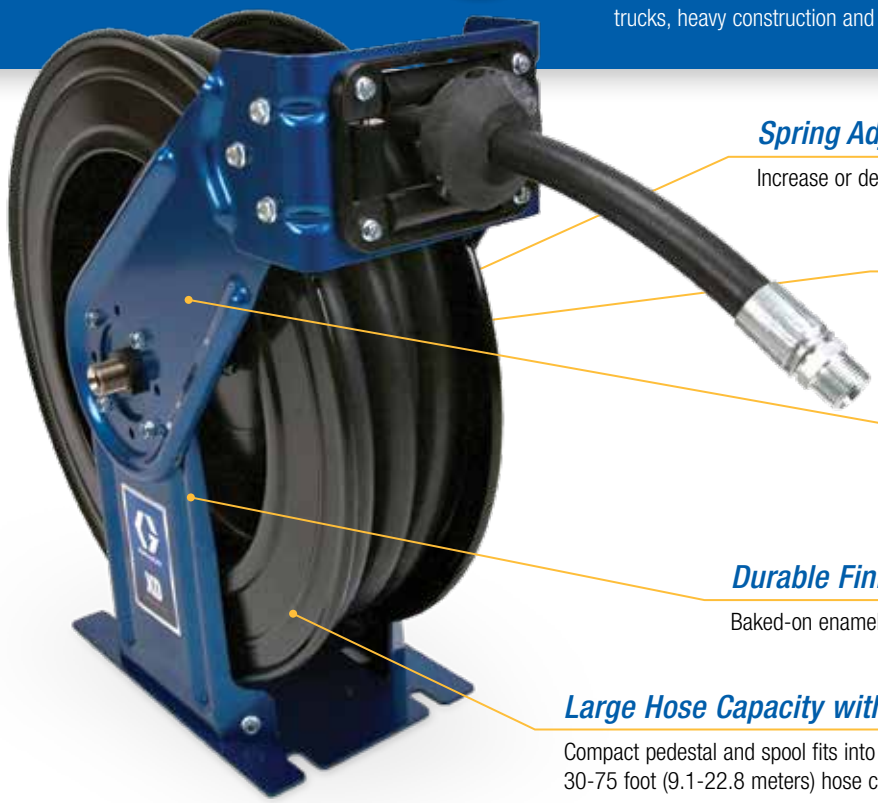

Spring Adjustment

Increase or decrease spring tension while reel is pressurized with fluid.

Full-Flow Swivel

Maximize material flow with minimal pressure drop for faster fills to get more vehicles through your shop.

Optional Adjustable Arm

Easily change to one of seven arm positions to fit your application. Order with arm (HS models) or without (HN models).

Durable Finish

Baked-on enamel finish (four colors available) protects reel from corrosion.

Large Hose Capacity with Small Profile

Compact pedestal and spool fits into tight spaces and can accommodate 30-75 foot (9.1-22.8 meters) hose capacity for a wide variety of applications.

Typical Applications

- Heavy-duty truck dealers
- Fleet maintenance
- Mining maintenance
- Public works garage
- Construction vehicle maintenance
- Heavy-duty mobile service trucks
- Mining
- Lube trucks

Typical Fluids Handled

- Petroleum- and synthetic-based oils (motor, gear and ATF)
- Diesel fuel
- Air
- Water
- Grease
- Antifreeze
- Windshield washer fluid
- Pressure wash
- Waste oil evacuation
- Diesel exhaust fluid (DEF)

Technical Specifications

Operating Temperature Range	
Air/Water/Antifreeze/ Windshield Washer Fluid	-40°F to 180°F (-40°C to 82°C)
Oil	-40°F to 180°F (-40°C to 82°C)
Grease	-40°F to 180°F (-40°C to 82°C)
Pressure Wash	-20°F to 225°F (-28°C to 107°C)
Fuel/Evacuation	-40°F to 120°F (-40°C to 49°C)
Diesel Exhaust Fluid (DEF)	12°F to 140°F (-11°C to 60°C)
Wetted Parts (Bare Reel Only)	
Air/Water/Antifreeze/ Windshield Washer Fluid Reels	Nickel plated carbon steel, aluminum, Buna-N rubber, UHMWPE
Oil	Nickel plated carbon steel, aluminum, Buna-N rubber, UHMWPE
Grease	Nickel plated stainless steel, Buna-N rubber, UHMWPE
Pressure Wash	Nickel plated stainless steel, Buna-N rubber, UHMWPE
Fuel/Evacuation	Nickel plated carbon steel, aluminum, Buna-N rubber, UHMWPE
Diesel Exhaust Fluid (DEF)	Zinc plated steel, polyurethane, steel
Weight (Without Hose)	98 lb (44.5 kg)
Sound Pressure Level	85.8 dB(A)
Sound Power Level	94.9 dB(A)
Instruction Manual	3A0138

Dimensions

	HS Models (with Adjustable Arm)	HN Models (without Arm)
A	9.0 in (229 mm)	7.5 in (196 mm)
B	21.5 in (546 mm)	18.1 in (460 mm)
C	26.0 in (659 mm)	23.4 in (594 mm)
D	22.1 in (562 mm)	20.0 in (508 mm)
E	23.1 in (588 mm)	21.0 in (533 mm)
F	27.6 in (701 mm)	25.2 in (640 mm)

HS Models

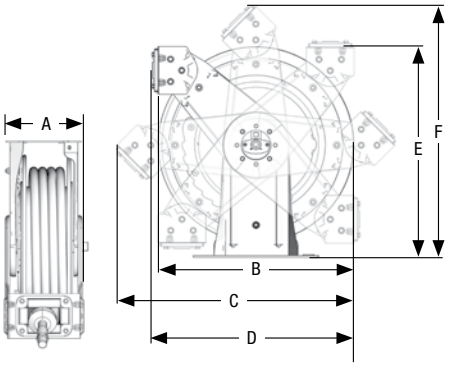

HN Models

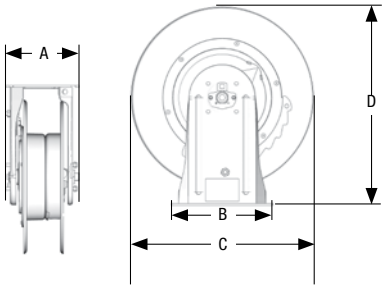

Typical Mounting Configurations

Overhead Mount

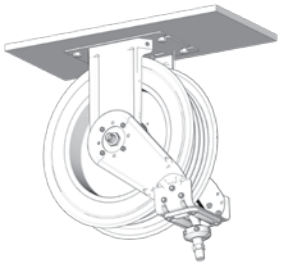

Wall Mount

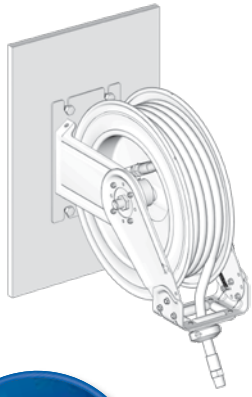

Bench/ Truck Mount

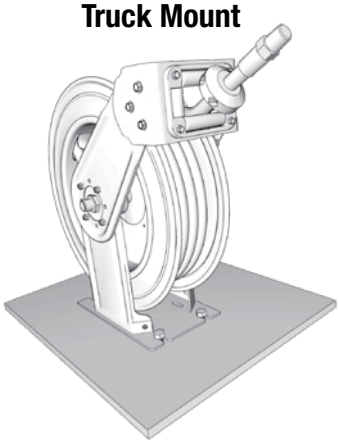

Truck Mount with Remote Mounted Roller Guide

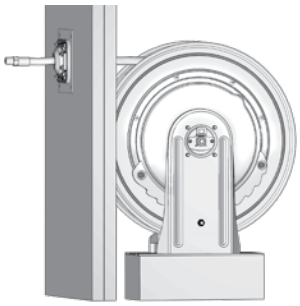

Metallic Blue (B)
Standard In-Stock Color

Available in **4 Colors**
Consult factory for lead times.

Yellow (F) **White (A)** **Desert Sand (G)**

Ordering Information

XD 30 Reel Assembly Ordering Guide

XD Series reels are available in four colors. Use the chart below to determine the correct part number to order. The last character of each part number indicates the hose reel color.

Reel Color	Identifier
White	A
Metallic Blue	B
Yellow	F
Desert Sand*	G

*Desert Sand not available on HN Models.

Order Example: Arm in overhead mount position, XD 30, oil, 3/4 in ID hose, 50 ft hose length

1 Select your reel position: HSMD5#

2 Select your reel color: (from Reel Assembly Ordering Guide – opposite) Metallic Blue = "B"

Order Part Number: HSMD5B

HS Models (with Adjustable Arm)

Reel Assemblies

Assembly includes hose, ball stop kit and roller guide. ***Required hose inlet kit sold separately.***

Fluid	Hose (Included)		Connection Size		Maximum Pressure psi (bar)	Reel, Hose and Ball Stop Assembly Part Number	Recommended Hose Inlet Kit
	ID in (mm)	Length ft (m)	Inlet	Outlet			
Air/Water/Antifreeze/ Windshield Washer Fluid	1/2 (13)	75 (23)	1/2 NPSM(M)	1/2 NPT(M)	300 (20.7)	HSLC8#	218549
	3/4 (19)	50 (15)	3/4 NPSM(M)	3/4 NPT(M)	300 (20.7)	HSLD5#	24E284
Oil	1/2 (13)	75 (23)	1/2 NPSM(M)	1/2 NPT(M)	1,500 (103)	HSMC8#	218549
	3/4 (19)	50 (15)	3/4 NPSM(M)	3/4 NPT(M)	1,250 (86)	HSMD5#	24E284
Grease	1/2 (13)	50 (15)	1/2 NPSM(M)	1/2 NPT(M)	5,000 (345)	HSHC5#	24E283
	3/8 (10)	75 (23)	1/2 NPSM(M)	3/8 NPT(F)	5,000 (345)	HSHB7#	24E283
Pressure Wash	3/8 (10)	75 (23)	1/2 NPSM(M)	3/8 NPT(M)	4,000 (276)	HSPB8#	24E283
	1/2 (13)	50 (15)	1/2 NPSM(M)	1/2 NPT(M)	4,500 (310)	HSPC5#	24E283
Fuel/Oil Evacuation	1 (13)	30 (9)	3/4 NPSM(M)	1 NPT(M)	125 (8.6)	HSLE3#	24E285
DEF	3/4 (19)	50 (15)	3/4 BSPP(M)	3/4 BSPP ORB	50 (3.4)	HSDD5#	24W250 (BSPP)

Bare Reels

Required hose inlet kit sold separately.

Fluid	Hose (Not Included)		Connection Size		Maximum Pressure psi (bar)	Part Number	Recommended Hose Inlet Kit
	ID in (mm)	Length ft (m)	Inlet in (mm)	Outlet in (mm)			
Oil	1/2 (13)	75 (23)	1/2 (13) (m)	1/2 (13) (m)	2,000 (138)	HSMCF#	218549
	3/4 (19)	50 (15)	3/4 (19) (m)	3/4 (19) (m)	2,000 (138)	HSMDD#	24E284
Grease	1/2 (13)	50 (15)	1/2 (13) (m)	1/2 (13) (m)	5,000 (345)	HSHCD#	24E283
Pressure Wash	3/8 (10)	75 (23)	1/2 (13) (m)	3/8 (10) (m)	4,000 (276)	HSHFF#	24E283
DEF	3/4 (19)	50 (15)	3/4 (19) (m)	3/4 (19) ORB	50 (3.4)	HSDDD#	24W250 (BSPP)

Ordering Information

HN Models (without Adjustable Arm)

Reels with Hose

Required hose inlet kit sold separately.

Fluid	Hose (Included)		Connection Size		Maximum Pressure psi (bar)	Reel and Hose Assembly Part Number	Recommended Hose Inlet Kit
	ID in (mm)	Length ft (m)	Inlet	Outlet			
Air/Water/Antifreeze/ Windshield Washer Fluid	1/2 (13)	75 (23)	1/2 NPSM(M)	1/2 NPT(M)	300 (20.7)	HNLC8#	218549
	3/4 (19)	50 (15)	3/4 NPSM(M)	3/4 NPT(M)	300 (20.7)	HNLD5#	24E284
Oil	1/2 (13)	75 (23)	1/2 NPSM(M)	1/2 NPT(M)	1,500 (103)	HNMC8#	218549
	3/4 (19)	50 (15)	3/4 NPSM(M)	3/4 NPT(M)	1,250 (86)	HNMD5#	24E284
Grease	1/2 (13)	50 (15)	1/2 NPSM(M)	1/2 NPT(M)	5,000 (345)	HNHC5#	24E283
	3/8 (10)	75 (23)	1/2 NPSM(M)	3/8 NPT(F)	5,000 (345)	HNHB7#	24E283
Pressure Wash	3/8 (10)	75 (23)	1/2 NPSM(M)	3/8 NPT(M)	4,000 (276)	HNPB8#	24E283
	1/2 (13)	50 (15)	1/2 NPSM(M)	1/2 NPT(M)	4,500 (310)	HNPC5#	24E283
Fuel/Oil Evacuation	1 (13)	30 (9)	3/4 NPSM(M)	1 NPT(M)	125 (8.6)	HNLE3#	24E285

Bare Reels

Required hose inlet kit sold separately.

Fluid	Hose (Not Included)		Connection Size		Maximum Pressure psi (bar)	Part Number	Recommended Hose Inlet Kit
	ID in (mm)	Length ft (m)	Inlet in (mm)	Outlet in (mm)			
Oil	3/4 (19)	50 (15)	3/4 (19) (m)	3/4 (19) (m)	2,000 (138)	HNMDD#	24E284
Grease	1/2 (13)	50 (15)	1/2 (13) (m)	1/2 (13) (m)	5,000 (345)	HNHCD#	24E283
Pressure Wash	3/8 (10)	75 (23)	1/2 (13) (m)	3/8 (10) (m)	4,000 (276)	HNHFF#	24E283

Ball Stop Kits

XD HS models include ball stop kits. Order separately if ordering a bare reel or if needed with HN models.

Part Number	Description
222225	For 1/4 in (6 mm) ID hose (not compatible with XD 30, 700 or 750)
218340	For 1/4-3/8 in (6-10 mm) ID hose (not for use with XD 30, 700 or 750)
218341	0.782 in ID used for 3/8 in and 1/2 in (10 mm and 13 mm) hose (not compatible with XD 30, 700 or 750)
237872	1.0 in ID used for 5/8 in (16 mm) hose
237873	1.123 in ID used for 3/4 in (19 mm) hose
237874	1.374 in ID used for 1 in (25 mm) hose
24D132	For 3/8 in (10 mm) ID hose
24D133	For 1/2 in (13 mm) ID hose

Ordering Information

Hose Inlet Kits

A hose inlet kit is required when ordering an XD reel.

Part Number	Description
218549	1/2 in (13 mm) hose inlet kit for air/water and oil. 2,000 psi (137 bar), 1/2 in NPT hose inlet ID, 24 in (610 mm) long
24E284	3/4 in (19 mm) hose inlet kit for air/water and oil. 1,250 psi (86 bar), 3/4 in NPT hose inlet ID, 24 in (610 mm) long
24E283	1/2 in (13 mm) hose inlet kit for grease or pressure wash. 5,000 psi (345 bar), 1/2 in NPT hose inlet ID, 24 in (610 mm) long
24E285	1/2 in (13 mm) hose inlet kit for fuel. 125 psi (8.6 bar), 1/4 in NPT hose inlet ID, 24 in (610 mm) long
24W250	2 ft DEF inlet hose kit for XD 30 reels. 3/4 in BSPP(F) x cut end and 90° elbow
24W251	6 ft DEF inlet hose kit for XD 30 reels. 3/4 in BSPP(F) x cut end and 90° elbow
124875	2 ft DEF hose, 3/4 in BSPP(M) x cut end (inlet hose)
124581	6 ft DEF hose, 3/4 in BSPP(M) x cut end (inlet hose)

Valve Hanger Kit

Part Number	Description
224444	Mounts to side of reel to allow hanging of non-metered and high-flow dispensing valves

Self-Adhesive Identification Label Set

Part Number	Description
180698	Set includes: 1 in x 5 in (25.4 mm x 127 mm) hose reels labels for Antifreeze, Water, SAE 5-40, SAE 10-40, SAE 20W, Hydraulic, Gear, SAE 10W, SAE 10-30, SAE 30W, Dexron, Air, Chassis, ATF

Hose Identification Wraps

Vinyl hose wrap for easy identification of meter fluid.

	Part Number	Description
	17S659	Red
	17S660	Blue
	17S661	Green
	17S662	Yellow
	17S663	White

7 Year Warranty!

Built-In Toughness

Engineered to take a beating and still reliably perform in harsh environments so it's ready when you need it. Choose from more colors, thread types and hoses or choose the bare reel so you can customize it with your hose. You get a professional look, easier fit and better-performing equipment.

Extensive Hose Offering

Standard models come complete with factory-installed hoses on the reel. Large selection of optional reels to fit various applications.

Full-Flow Swivel

Maximize material flow with minimal pressure drop for faster fills to get more vehicles through your shop.

Rugged and Durable Body

Heavy-duty welded spool and ribbed frame for extra strength and toughness over the long haul.

Meets Worldwide Needs

Built standard with 90° elbow with NPT, BSPP or BSPT threads. 1-1/2 in models also include 2 in Victaulic™*-style groove. Accessories attach without the need for adapters.

Typical Applications

- Heavy-duty truck dealers
- Fleet maintenance
- Mining maintenance
- Public works garages
- Construction vehicle maintenance
- Heavy-duty mobile service trucks
- Agriculture
- Lube trucks

Typical Fluids Handled

- Petroleum- and synthetic-based oils (motor, gear and ATF)
- Diesel fuel
- Air
- Water
- Antifreeze
- Waste oil evacuation

Technical Specifications

Operating Temperature Range	
Oil Reels – 1 inch	-20°F to 180°F (-28°C to 82°C)
All Other Reels	-40°F to 180°F (-40°C to 82°C)
Wetted Parts	Carbon steel, nickel plated cast iron, Buna-N rubber, FKM UHMWPE
Maximum Recommended Mounting Height	15 ft (4.6 m)
Sound Pressure Level	77.6 dB(A)
Sound Power Level	86.8 dB(A)

*Victaulic is a trademark of Victaulic Company of America.

How to Select an XD 40/50 Hose Reel

2 Ways to Order!

Option 1 – Reel with Hose

(Pages 246-247)

All models include the hose, hose guide and ball stop kit.

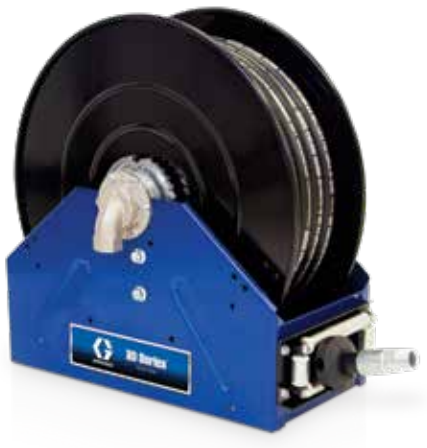

Option 2 – Bare Reel

(Pages 246-247)

Bare reel models do not include hose and ball stop kit.

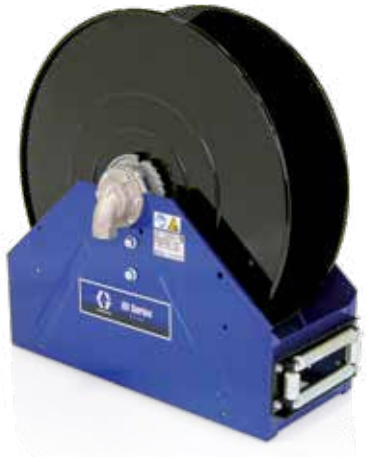

Choose Your Accessories (Pages 248)

Hose Inlet Kit

A hose inlet is required for installation. They are appropriately sized for the hose reels based on type of fluid, hose size and pressure.

Support Arm

For additional support, add arm brackets to the reel. Required for overhead mounting applications.

Mounting Kit

Overhead mounting options available for XD 40 reels.

Hose Kit

Large selection of hoses appropriately sized for the hose reels based on type of fluid, hose size and pressure.

Hose Inlet Kit

A hose inlet is required for installation. They are appropriately sized for the hose reels based on type of fluid, hose size and pressure.

Ball Stop Kit

When the ball stop comes in contact with the hose guide, the hose is prohibited from rewinding.

Support Arm

For additional support, add arm brackets to the reel. Required for overhead mounting applications.

Mounting Kit

Overhead mounting options available for XD 40 reels.

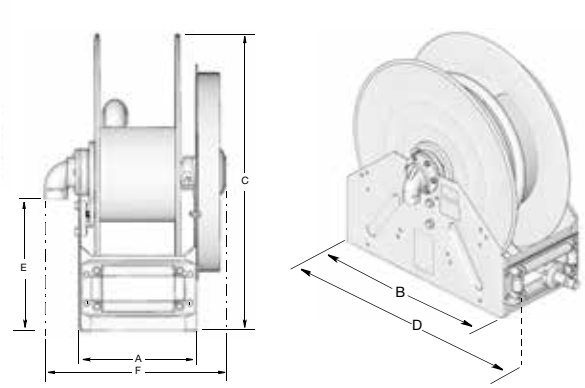

Dimensions

Model	Inlet/Outlet Size NPT(F)	Dimensions in (mm)*					
		A	B	C	D	E	F
XD 4010 – Model 1	1 in/1 in	11.83 (300)	24 (610)	26.13 (664)	26.4 (671)	10.91 (277)	16.54 (420)
XD 4010 – Model 2	1 in/1 in	11.83 (300)	24 (610)	26.13 (664)	26.4 (671)	10.91 (277)	17.47 (444)
XD 5010	1 in/1 in	11.83 (300)	28.5 (724)	30.13 (765)	29.4 (747)	10.91 (277)	17.4 (444)
XD 5015	1-1/2 in/ 1-1/2 in	11.83 (300)	28.5 (724)	30.13 (765)	29.4 (747)	10.91 (277)	18.24 (463)

*For complete list of dimensions, see Graco product manual 3A2990.

Typical Mounting Configurations

Truck-Bed or Bench Mount

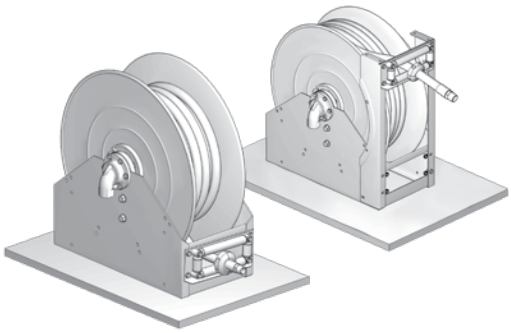

Overhead Mount (XD 40 only)

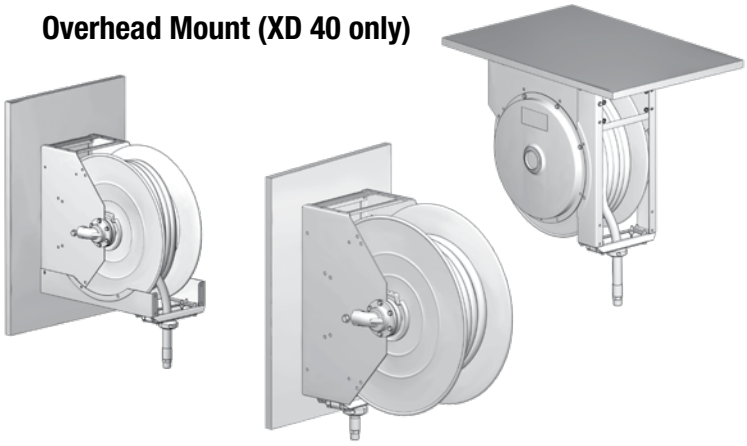

Standard In-Stock Color:
Metallic Blue

Ordering Information

XD 40 Reels with Hose

Includes hose, ball stop kit and hose guide. ***Required hose inlet kit sold separately.***

Reel Size	Fluid	Hose ID in (mm)	Hose Length ft (m)	Connection Size Inlet NPT(F)	Connection Size Outlet NPT(M)	Maximum Pressure psi (bar)	Part Number by Reel Color: Metallic Blue	Part Number by Reel Color: Yellow	Part Number by Reel Color: White	Hose Inlet Kit (Order Separately)	Truck/Bench Mount Only
XD 4010	Air/Water	1/2 (13)	100 (30)	1	1/2	300 (21)	24P327	24P328	24P329	24R111	
		3/4 (19)	75 (23)	1	3/4	300 (21)	24P330	24P331	24P332		
		3/4 (19)	100 (30)	1	3/4	300 (21)	24P333	24P334	24P335		
		1 (25)	50 (15)	1	1	300 (21)	24P336	24P337	24P338		
	Antifreeze	3/4 (19)	100 (30)	1	3/4	300 (21)	24P984	24P985	24P986		
	Oil	1/2 (13)	100 (30)	1	1/2	2,000 (138)	24P339	24P340	24P341		
		3/4 (19)	75 (23)	1	3/4	1,500 (103)	24P342	24P343	24P344		•
		3/4 (19)	75 (23)	1	3/4	1,500 (103)	24R857	24R859	24R860		
		3/4 (19)	100 (30)	1	3/4	1,500 (103)	24P345	24P346	24P347		
		1 (25)	50 (15)	1	1	1,275 (88)	24P348	24P349	24P350		•
		1 (25)	50 (15)	1	1	1,275 (88)	24R861	24R862	24R863		
	Waste Oil Evacuation	1 (25)	50 (15)	1	1	250 (17)	24P351	24P352	24P353	24R112	
	Diesel Fuel	1 (25)	50 (15)	1	1	250 (17)	24P354	24P355	24P356	24R115	

XD 40 Bare Reels

Reel Size	Fluid	Hose Length Capacity (in x ft (m)) 1/2	Hose Length Capacity 3/4	Hose Length Capacity 1	Connection Size Inlet NPT(F)	Connection Size Outlet NPT(F)	Maximum Pressure psi (bar)	Part Number by Reel Color: Metallic Blue	Part Number by Reel Color: Yellow	Part Number by Reel Color: White	Hose Inlet Kit (order separately)	Truck/ Bench Mount Only
XD 4010	Air/Water	100 (30)	75 (23)	50 (15)	1	1	600 (41)	24P313	24P315	24P316	24R111	
		–	100 (30)	–	1	1	600 (41)	24P317	24P318	24P319		
	Antifreeze	–	100 (30)	50 (15)	1	1	600 (41)	26A140	26A141	26A142		
	Oil	–	75 (23)	50 (15)	1	1	2,000 (138)	24P320	24P322	24P323		•
		–	75 (23)	50 (15)	1	1	2,000 (138)	24R854	24R855	24R856		
		100 (30)	100 (30)	–	1	1	2,000 (138)	24P324	24P325	24P326		
	Waste Oil Evacuation	–	–	75 (23)	1	1	600 (41)	24P317	24P318	24P319	24R112	
	Diesel Fuel	–	–	50 (15)	1	1	600 (41)	24P317	24P318	24P319	24R115	

Remember to Order!

Ball Stop Kit
See page 248

Support Arm
See page 248

Hose
See page 260-261

Hose Inlet
See page 248

Ordering Information

XD 50 Reels with Hose

Includes hose, ball stop kit and hose guide. ***Required hose inlet kit sold separately.***

Reel Size	Fluid	Hose		Connection Size		Maximum Pressure psi (bar)	Part Number by Reel Color			Hose Inlet Kit (Order Separately)
		ID in (mm)	Length ft (m)	Inlet NPT(F)	Outlet NPT(M)		Metallic Blue	Yellow	White	
XD 5010	Air/Water	1 (25)	75 (23)	1	1	300 (21)	24P470	24P471	24P472	24R111
		1 (25)	100 (30)	1	1	300 (21)	24P473	24P474	24P475	
	Antifreeze	1 (25)	100 (30)	1	1	300 (21)	24P987	24P988	24P989	
	Oil	1 (25)	75 (23)	1	1	1,275 (88)	24P476	24P477	24P478	
	Diesel Fuel	1 (25)	75 (23)	1	1	250 (17)	24P485	24P486	24P487	24R115
		1 (25)	100 (30)	1	1	250 (17)	24P488	24P489	24P490	
XD 5015**	Waste Oil Evacuation	1-1/4 (32)	35 (11)	1-1/2	1-1/4	200 (14)	24P479	24P480	24P481	–
		1-1/4 (32)	50 (15)	1-1/2	1-1/4	200 (14)	24P482	24P483	24P484	
	Diesel Fuel	1-1/4 (32)	35 (11)	1-1/2	1-1/4	250 (17)	24P491	24P492	24P493	24R117
		1-1/4 (32)	50 (15)	1-1/2	1-1/4	250 (17)	24P494	24P495	24P496	
		1-1/2 (38)	50 (15)	1-1/2	1-1/2	150 (10)	24P497	24P498	24P499	

**Standard 2 inch Vitaulic™-style groove on inlet.

XD 50 Bare Reels

Reel Size	Fluid	Hose Length Capacity (in x ft (m))			Connection Size		Maximum Pressure psi (bar)	Part Number by Reel Color			Hose Inlet Kit (order separately)
		1	1-1/4	1-1/2	Inlet NPT(F)	Outlet NPT(F)		Metallic Blue	Yellow	White	
XD 5010	Air/Water	100 (30)	–	–	1	1	600 (41)	24P455	24P456	24P457	24R111
	Antifreeze	100 (30)	–	–	1	1	600 (41)	26A143	26A144	26A145	
	Oil	75 (23)	–	–	1	1	2,000 (138)	24P458	24P459	24P460	
	Diesel Fuel	100 (30)	–	–	1	1	600 (41)	24P455	24P456	24P457	24R115
		75 (23)	–	–	1	1	600 (41)	24P464	24P465	24P466	
XD 5015**	Waste Oil Evacuation	–	50 (15)		1-1/2	1-1/2	600 (41)	24P461	24P462	24P463	–
	Diesel Fuel	–	50 (15)	–	1-1/2	1-1/2	600 (41)	24P461	24P462	24P463	24R117
		–	50 (15)	50 (15)	1-1/2	1-1/2	600 (41)	24P467	24P468	24P469	

**Standard 2 inch Vitaulic™-style groove on inlet.

Remember to Order!

Ball Stop Kit
See page 248

Support Arm
See page 248

Hose
See page 260-261

Hose Inlet
See page 248

Victaulic is a trademark of Victaulic Company of America.

Ordering Information

Ball Stop Kits

Part Number	Description
237873	Ball stop kit used for 3/4 in (19 mm) hose
237874	Ball stop kit used for 1 in (25 mm) hose
24R060	Ball stop kit used for a 1-1/4 in (32 mm) hose
24R061	Ball stop kit used for a 1-1/2 in (38 mm) hose

Hose Guides

Part Number	Description
24R072	Roller guide kit with bracket for XD 40 and XD 60
24R074	Roller guide kit with bracket for XD 50

Support Arm Kits

Part Number	Description
24R076	Support arm kit for XD 40
24R077	Support arm kit for XD 50

Mounting Kit

Part Number	Description
237932	Overhead or wall mounting kit for XD 40. Includes all parts needed for overhead mounting one reel.

Hose Inlet Kits

Part Number	Description
24R111	1 in (25 mm) hose inlet kit for air/water and oil. 1,275 psi (88 bar), 1 in NPT hose inlet ID, 28 in (710 mm) long
24R112	1 in (25 mm) hose inlet kit for waste oil evacuation. 250 psi (17 bar), 1 in NPT hose inlet ID, 28 in (710 mm) long
24R115	1 in (25 mm) hose inlet kit for diesel fuel. 250 psi (17 bar), 1 in NPT hose inlet ID, 28 in (710 mm) long
24R117	1-1/2 in (38 mm) hose inlet kit for diesel fuel. 150 psi (10 bar), 1.5 in NPT hose inlet ID, 28 in (710 mm) long

Self-Adhesive Identification Label Set

Part Number	Description
180698	Set includes: 1 in x 5 in (25.4 mm x 127 mm) hose reels labels for Antifreeze, Water, SAE 5-40, SAE 10-40, SAE 20W, Hydraulic, Gear, SAE 10W, SAE 10-30, SAE 30W, Dexron, Air, Chassis, ATF

Hose Identification Wraps

Vinyl hose wrap for easy identification of meter fluid

	Part Number	Description
	17S659	Red
	17S660	Blue
	17S661	Green
	17S662	Yellow
	17S663	White

XD Series Powered Bare Hose Reels

Oil | Gear Lube | ATF | Grease | Fuel | Air | Water | Oil/ Waste Oil

60 / 70 / 80

7 Year Warranty!

Safe, Versatile Powered Hose Reels

We like to think of the XD motor rewind reels as super-powered. The innovative design is packed with features to help you work safer, smarter and faster. We demand extensive product testing, often exceeding industry standards to ensure you get the best product on the market.

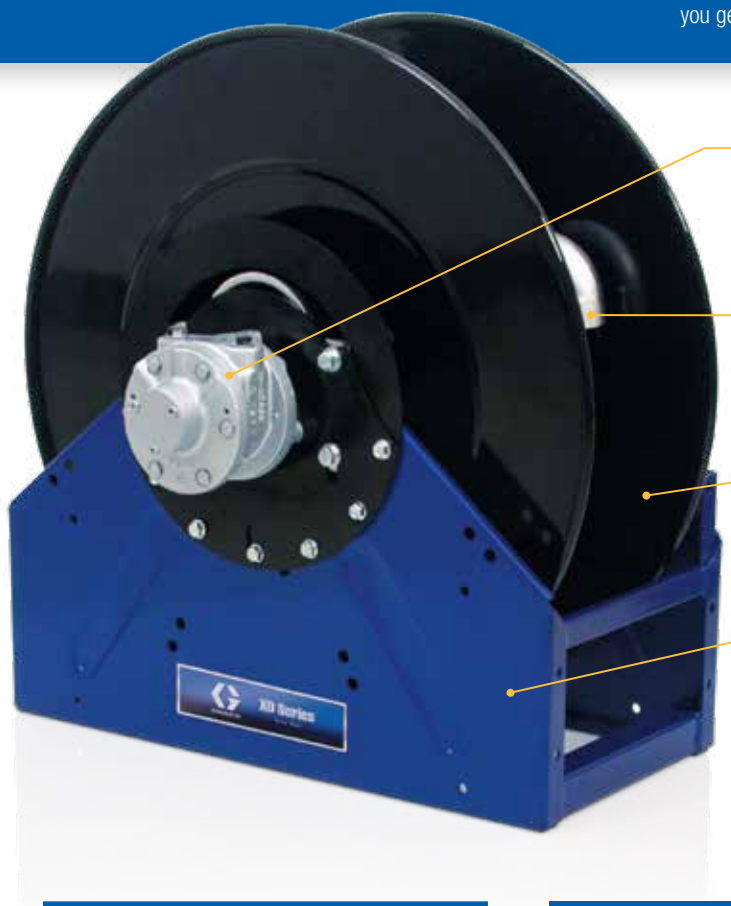

Safe, Reliable Direct Drive and Gear Motors

Drive unit is clean and lubricated for life. No need to worry about greasy, exposed drive chains that need maintenance and can be dangerous to operators.

Easy System Integration

Easily change the inlet and motor direction to give you the option of a right- or left-hand flow orientation.

Heavy-duty Welded Spool

Built to handle the weight of heavy hoses. Designed to surround and protect the drive unit from the elements to promote longer-lasting, safer operation.

Rugged and Durable Body

Heavy-duty one piece welded frame is engineered to flex under extreme operating conditions and is stronger than bolted frames that can loosen with use. Individually painted and powder-coated components have superior corrosion resistance over assembled and painted products.

Typical Applications

- Heavy-duty truck dealers
- Fleet maintenance
- Mining maintenance
- Public works garages
- Construction vehicle maintenance
- Heavy-duty mobile service trucks
- Agriculture
- Lube trucks

Typical Fluids Handled

- Petroleum- and synthetic-based oils (motor, gear and ATF)
- Diesel fuel
- Air
- Water
- Grease
- Waste oil evacuation

Technical Specifications

Operating Temperature Range	
Motorless Reels	-40°F to 180°F (-40°C to 82°C)
Air/Water Applications	-40°F to 180°F (-40°C to 82°C)
Waste Oil Evacuation Applications	-40°F to 180°F (-40°C to 82°C)
Oil Applications	-40°F to 180°F (-40°C to 82°C)
Grease Applications	0°F to 180°F (-18°C to 82°C)
Diesel Fuel Applications	-40°F to 140°F (-40°C to 60°C)
Wetted Parts	Nickel plated cast iron, cast iron, Buna-N rubber, polyethylene
Electric and Hydraulic Motors Sound Pressure Level	<80 dB(A)
Pneumatic Motors Sound Pressure Level	84.6 dB(A)
Pneumatic Motors Sound Power Level	89.9 dB(A)
Instruction Manual	332630

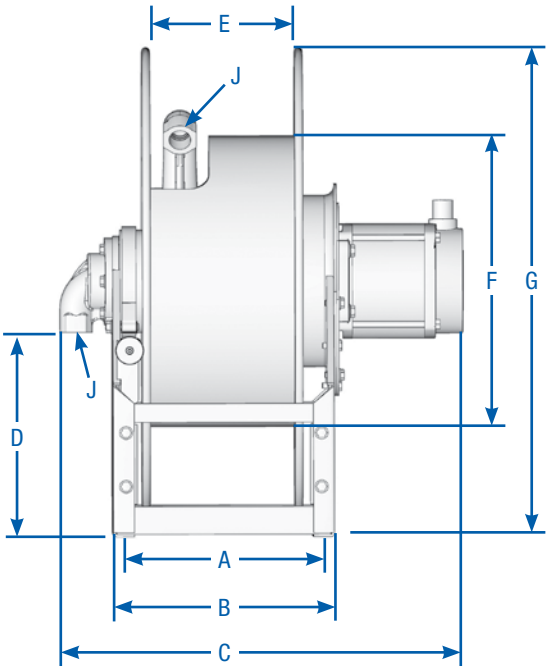

Dimensions

Reference dimension "D" for specific motor type

Model	Inlet/Outlet Size (J) NPT(F)	Dimensions in (mm)								
		A (Mounting Holes)	B	C			D	E	F	G
				Pneumatic	Hydraulic	Electric				
XD 6010	1 in/1 in	10.45 (256)	11.8 (300)	20.4 (519)	15.7 (400)	21.6 (547)	10.9 (277)	7.8 (198)	15.5 (394)	26.1 (663)
XD 7010	1 in/1 in	12.95 (329)	14.3 (363)	22.9 (583)	18.2 (463)	24.1 (611)	10.9 (277)	10 (254)	10 (254)	26.1 (663)
XD 7015	1-1/2 in/ 1-1/2 in	12.95 (329)	14.3 (363)	23.7 (603)	19 (483)	24.8 (631)	10.9 (277)	10 (254)	10 (254)	26.1 (663)
XD 7020	2 in/2 in	12.95 (329)	14.3 (363)	24.1 (613)	19.4 (493)	25.2 (641)	10.2 (259)	10 (254)	10 (254)	26.1 (663)
XD 8010	1 in/1 in	20.68 (525)	22.1 (561)	30.7 (779)	26 (659)	31.8 (807)	13.4 (340)	18 (457)	15.5 (394)	30.1 (765)
XD 8015	1-1/2 in/ 1-1/2 in	20.68 (525)	22.1 (561)	31.4 (799)	26.7 (679)	32.5 (827)	13.4 (340)	18 (457)	15.5 (394)	30.1 (765)
XD 8020	2 in/2 in	20.68 (525)	22.1 (561)	31.9 (809)	27.1 (689)	33 (837)	12.7 (323)	18 (457)	15.5 (394)	30.1 (765)

Typical Mounting Configurations

Bench/Trunk Mount

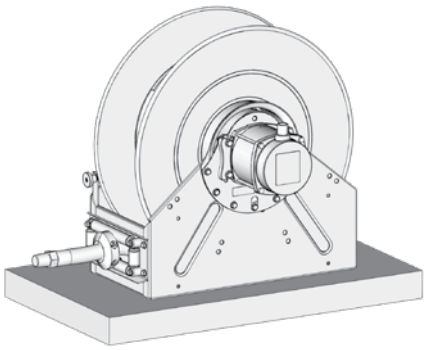

Truck Mount with Remote Mounted Roller Guide

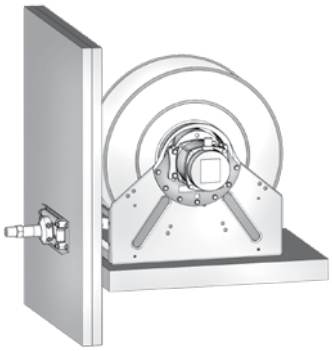

How to Select an XD Powered Bare Hose Reel

A Complete Family of Motor Rewind Hose Reels

The innovative design of the XD reel family is packed with features to help you work safer, smarter and faster. Direct-drive motor options include hydraulic, pneumatic and electric for air, water, oil, grease, fuel dispense and waste oil evacuation applications. Use this selection chart to configure the XD reel to suit your needs.

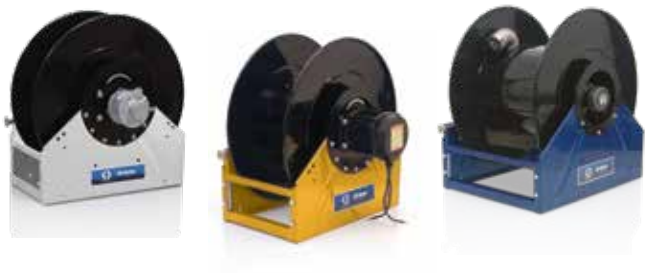

A — Specify the Hose Fluid Type and Capacity

REQUIRED

Determine your fluid type and capacity before selecting your reel.

Fluid Type	Hose ID in (mm)	Hose Length ft (m)
☐ Air/Water	☐ 1/2 (13)	☐ 50 (15)
☐ Antifreeze	☐ 1 (25)	☐ 75 (23)
☐ Petroleum- and Synthetic-Based Oils	☐ 1-1/2 (38)	☐ 100 (30)
☐ Waste Oil	☐ 2 (51)	☐ 150 (46)
☐ Diesel Fuel		

B — Choose Your Reel Size

REQUIRED

☐ XD 60 ☐ XD 70 ☐ XD 80

C — Choose Your Reel Color

REQUIRED

Select from Blue, Yellow or White.

☐ Blue ☐ Yellow ☐ White

D — Select Your Drive Type and Frame

REQUIRED

Reels can be ordered with a motor or without. If you choose a model without a motor, you must purchase the motor separately.

☐ Order Reel with Motor Included (Pages 254-256)

☐ Order Reel and Motor Separately (Page 257)

- ☐ Pneumatic Motor
- ☐ Hydraulic Motor
- ☐ Electric Motor
  - ☐ 12 VDC, 1/2 HP
  - ☐ 12 VDC, 2/3 HP
  - ☐ 24 VDC, 1/2 HP
  - ☐ 24 VDC, 2/3 HP
  - ☐ 115 VAC, 0.40 HP

E — Choose Your Controls (Pages 258)

REQUIRED

☐ **Pneumatic Motor**
- ☐ Pneumatic 2-position, 3-way valve

☐ **Hydraulic Motor**
- ☐ 12 VDC electric control of hydraulic motor, 3-position, 4-way valve
- ☐ 12 VDC electric control of hydraulic motor with switch, 3-position, 4-way valve
- ☐ 24 VDC electric control of hydraulic motor, 3-position, 4-way valve
- ☐ 24 VDC electric control of hydraulic motor with switch, 3-position, 4-way valve

☐ **Electric Motor**
- ☐ Hazardous location on/off button
- ☐ 12 VDC intermittent-duty solenoid
- ☐ 24 VDC intermittent-duty solenoid
- ☐ Manual reset button circuit breaker (25 or 50 amp)

F — Hose Inlet Kit (Page 259)

REQUIRED FOR INSTALLATION

A hose inlet is required for installation. They are appropriately sized for the hose reels based on type of fluid, hose size and pressure.

Note: All 1-1/2 in (38 mm) hose reels include a 2 in (51 mm) Victaulic-style groove on inlet. If you are using these reels, it is recommended to order an inlet kit from Graco.

☐ Yes (required for installation)

☐ No (will supply my own hose inlet kit)

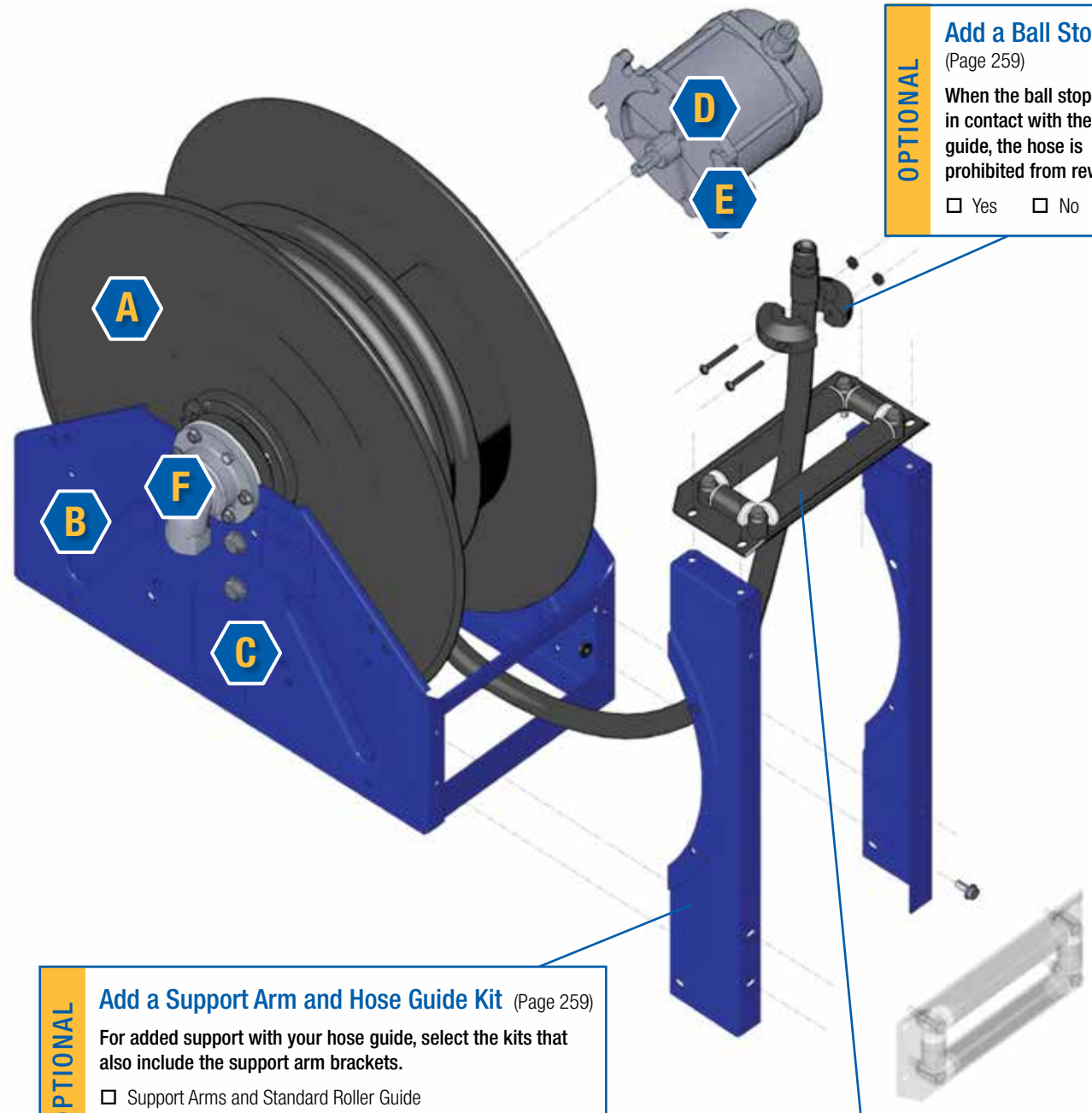

OPTIONAL

Add a Ball Stop Kit

(Page 259)

When the ball stop comes in contact with the hose guide, the hose is prohibited from rewinding.

☐ Yes ☐ No

OPTIONAL

Add a Support Arm and Hose Guide Kit

(Page 259)

For added support with your hose guide, select the kits that also include the support arm brackets.

☐ Support Arms and Standard Roller Guide

☐ Support Arms and Fixed, Stainless Steel Hose Guide

OPTIONAL

Add a Hose Guide Kit

(Page 259)

Select between a fixed, stainless steel hose guide or a general roller guide.

Hose guide mounts directly to the reel frame or in three different positions on the support arm.

☐ Standard Roller Guide

☐ Fixed, Stainless Steel Hose Guide

XD Series Bare Hose Reels

Oil | Gear Lube | ATF | Grease | Fuel | Air | Water | Oil/ Waste Oil

60 / 70 / 80

Ordering Information

Reel with Motor – 1 in (25 mm) Inlet/Outlet

XD 60 Reels

Reel Size	Fluid	Motor	Hose Capacity of Reel ft (m) Hose ID in (mm) 1/2 (13)	3/4 (19)	1 (25)	Maximum Pressure psi (bar)	Weight lb (kg)	Inlet/ Outlet Size NPT(F)	Reel Part Number by Color: Metallic Blue	Yellow	White	Hose Accessories (Must be ordered separately): Hose Inlet Kit	Hose
XD 6010	Air/ Water	Pneumatic	100 (30)	100 (30)	50 (15)	600 (41)	123 (56)	1 in/1 in (25 mm/ 25 mm)	24R419	24R420	24R421	24R111	126359 – 1/2 in x 100 ft (13 mm x 30 m)
		Hydraulic	100 (30)	100 (30)	50 (15)	600 (41)	101 (45)		24R414	24R415	24R416		
		12 VDC Electric, 1/2 HP	100 (30)	100 (30)	50 (15)	600 (41)	133 (60)		24R404	24R405	24R406		126360 – 3/4 in x 75 ft (19 mm x 23 m)
		24 VDC Electric, 1/2 HP	100 (30)	100 (30)	50 (15)	600 (41)	133 (60)		24R407	24R408	24R409		126361 – 3/4 in x 100 ft (19 mm x 30 m)
		115 VAC Electric	100 (30)	100 (30)	50 (15)	600 (41)	133 (60)		24R410	24R412	24R413		126362 – 1 in x 50 ft (25 mm x 15 m)
	Oil	Pneumatic	100 (30)	100 (30)	50 (15)	3,000 (207)	125 (56)	1 in/1 in (25 mm/ 25 mm)	24R434	24R435	24R436		126375 – 1/2 in x 100 ft (13 mm x 30 m)
		Hydraulic	100 (30)	100 (30)	50 (15)	3,000 (207)	103 (47)		24R431	24R432	24R433		
		12 VDC Electric, 1/2 HP	100 (30)	100 (30)	50 (15)	3,000 (207)	134 (61)		24R422	24R423	24R424		126376 – 3/4 in x 75 ft (19 mm x 23 m)
		24 VDC Electric, 1/2 HP	100 (30)	100 (30)	50 (15)	3,000 (207)	134 (61)		24R425	24R426	24R427		126377 – 3/4 in x 100 ft (19 mm x 30 m)
		115 VAC Electric	100 (30)	100 (30)	50 (15)	3,000 (207)	134 (61)		24R428	24R429	24R430		126503 – 1 in x 50 ft (25 mm x 15 m)
	Diesel Fuel	Pneumatic	100 (30)	100 (30)	50 (15)	600 (41)	123 (56)	1 in/1 in (25 mm/ 25 mm)	24R419	24R420	24R421	24R115	24R102 – 1 in x 50 ft (25 mm x 15 m)
		Hydraulic	100 (30)	100 (30)	50 (15)	600 (41)	101 (45)		24R414	24R415	24R416		
		12 VDC Electric, 1/2 HP	100 (30)	100 (30)	50 (15)	600 (41)	133 (60)		24R404	24R405	24R406		
		24 VDC Electric, 1/2 HP	100 (30)	100 (30)	50 (15)	600 (41)	133 (60)		24R407	24R408	24R409		
		115 VAC Electric	100 (30)	100 (30)	50 (15)	600 (41)	133 (60)		24R410	24R412	24R413		
	Waste Oil Evac.	Pneumatic	–	–	50 (15)	600 (41)	123 (56)	1 in/1 in (25 mm/ 25 mm)	24R419	24R420	24R421	24R112	126379 – 1 in x 50 ft (25 mm x 15 m)
		Hydraulic	–	–	50 (15)	600 (41)	101 (45)		24R414	24R415	24R416		
		12 VDC Electric, 1/2 HP	–	–	50 (15)	600 (41)	133 (60)		24R404	24R405	24R406		
		24 VDC Electric, 1/2 HP	–	–	50 (15)	600 (41)	133 (60)		24R407	24R408	24R409		
		115 VAC Electric	–	–	50 (15)	600 (41)	133 (60)		24R410	24R412	24R413		
	Grease	Pneumatic	–	–	50 (15)	3,000 (207)	125 (75)	1 in/1 in (25 mm/ 25 mm)	24R434	24R435	24R436	–	–
		Hydraulic	–	–	50 (15)	3,000 (207)	103 (47)		24R431	24R432	24R433		
		12 VDC Electric, 1/2 HP	–	–	50 (15)	3,000 (207)	134 (61)		24R422	24R423	24R424		
		24 VDC Electric, 1/2 HP	–	–	50 (15)	3,000 (207)	134 (61)		24R425	24R426	24R427		
		115 VAC Electric	–	–	50 (15)	3,000 (207)	134 (61)		24R428	24R429	24R430		

Remember to Order!

Ball Stop Kit
See page 259

Hose Guide
See page 259

Support Arm
See page 259

Hose
See page 260-261

Hose Inlet
See page 259

Ordering Information

Reel with Motor – 1 in (25 mm) Inlet/Outlet

XD 70 / XD 80 Reels

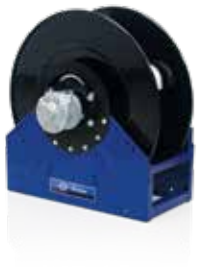

Reel Size	Fluid	Motor	Hose Capacity of Reel ft (m) Hose ID 1 in (25 mm)	Maximum Pressure psi (bar)	Weight lb (kg)	Inlet/ Outlet Size NPT(F)	Reel Part Number by Color: Metallic Blue	Yellow	White	Hose Accessories (Must be ordered separately): Hose Inlet Kit	Hose
XD 7010	Air/ Water	Pneumatic	100 (30)	600 (41)	122 (55)	1 in/1 in (25 mm/ 25 mm)	24R449	24R450	24R451	24R111	126363 – 1 in x 75 ft (25 mm x 23 m) 126364 – 1 in x 100 ft (25 mm x 30 m)
		Hydraulic	100 (30)	600 (41)	100 (45)		24R446	24R447	24R448		
		12 VDC Electric, 1/2 HP	100 (30)	600 (41)	132 (60)		24R437	24R438	24R439		
		24 VDC Electric, 1/2 HP	100 (30)	600 (41)	132 (60)		24R440	24R441	24R442		
		115 VAC Electric	100 (30)	600 (41)	132 (60)		24R443	24R444	24R445		
	Oil	Pneumatic	100 (30)	3,000 (207)	100 (56)	1 in/1 in (25 mm/ 25 mm)	24R464	24R465	24R466		126504 – 1 in x 75 ft (25 mm x 23 m) 126505 – 1 in x 100 ft (25 mm x 30 m)
		Hydraulic	100 (30)	3,000 (207)	102 (46)		24R461	24R462	24R463		
		12 VDC Electric, 1/2 HP	100 (30)	3,000 (207)	133 (60)		24R452	24R453	24R454		
		24 VDC Electric, 1/2 HP	100 (30)	3,000 (207)	133 (60)		24R455	24R456	24R457		
		115 VAC Electric	100 (30)	3,000 (207)	133 (60)		24R458	24R459	24R460		
	Diesel Fuel	Pneumatic	100 (30)	600 (41)	122 (55)	1 in/1 in (25 mm/ 25 mm)	24R449	24R450	24R451	24R115	24R103 – 1 in x 75 ft (25 mm x 23 m) 24R106 – 1 in x 100 ft (25 mm x 30 m)
		Hydraulic	100 (30)	600 (41)	100 (45)		24R446	24R447	24R448		
		12 VDC Electric, 1/2 HP	100 (30)	600 (41)	132 (60)		24R437	24R438	24R439		
		24 VDC Electric, 1/2 HP	100 (30)	600 (41)	132 (60)		24R440	24R441	24R442		
		115 VAC Electric	100 (30)	600 (41)	132 (60)		24R443	24R444	24R445		
XD 8010	Air/ Water	Pneumatic	150 (46)	600 (41)	164 (74)	1 in/1 in (25 mm/ 25 mm)	24R531	24R532	24R533	24R111	–
		Hydraulic	150 (46)	600 (41)	142 (64)		24R528	24R529	24R530		
		12 VDC Electric, 1/2 HP	150 (46)	600 (41)	173 (78)		24R519	24R520	24R521		
		24 VDC Electric, 1/2 HP	150 (46)	600 (41)	173 (78)		24R522	24R523	24R524		
		115 VAC Electric	150 (46)	600 (41)	173 (78)		24R525	24R526	24R527		
	Oil	Pneumatic	150 (46)	3,000 (207)	165 (75)	1 in/1 in (25 mm/ 25 mm)	24R546	24R547	24R548		–
		Hydraulic	150 (46)	3,000 (207)	143 (65)		24R543	24R544	24R545		
		12 VDC Electric, 1/2 HP	150 (46)	3,000 (207)	175 (79)		24R534	24R535	24R536		
		24 VDC Electric, 1/2 HP	150 (46)	3,000 (207)	175 (79)		24R537	24R538	24R539		
		115 VAC Electric	150 (46)	3,000 (207)	175 (79)		24R540	24R541	24R542		
	Diesel Fuel	Pneumatic	150 (46)	600 (41)	164 (74)	1 in/1 in (25 mm/ 25 mm)	24R531	24R532	24R533	24R115	24T252 – 1 in x 150 ft (25 mm x 46 m)
		Hydraulic	150 (46)	600 (41)	142 (64)		24R528	24R529	24R530		
		12 VAC Electric, 1/2 HP	150 (46)	600 (41)	173 (78)		24R519	24R520	24R521		
		24 VAC Electric, 1/2 HP	150 (46)	600 (41)	173 (78)		24R522	24R523	24R524		
		115 VAC Electric	150 (46)	600 (41)	173 (78)		24R525	24R526	24R527		

Remember to Order!

Ball Stop Kit
See page 259

Hose Guide
See page 259

Support Arm
See page 259

Hose
See page 260-261

Hose Inlet
See page 259

XD Series Bare Hose Reels

Oil | Gear Lube | ATF | Grease | Fuel | Air | Water | Oil/ Waste Oil

60 / 70 / 80

Ordering Information

Reel with Motor – 1-1/2 in (38 mm) Inlet/Outlet

XD 70 / XD 80 Reels

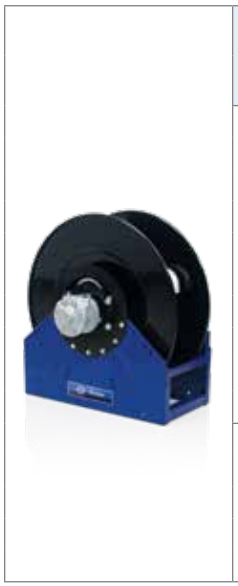

Reel Size	Fluid	Motor	Hose Capacity of Reel ft (m) Hose ID 1-1/2 in (38 mm)	Maximum Pressure psi (bar)	Weight lb (kg)	Inlet/ Outlet Size NPT(F)	Reel Part Number by Color: Metallic Blue	Yellow	White	Hose Accessories (Must be ordered separately): Hose Inlet Kit	Hose
XD 7015	Diesel Fuel	Pneumatic	65 (20)	600 (41)	100 (56)	1-1/2 in/ 1-1/2 in (38 mm/ 38 mm)	24R516	24R517	24R518	24R117	24R110 – 1-1/4 in x 50 ft (32 mm x 15 m) 24R114 – 1-1/2 in x 50 ft (38 mm x 15 m)
		Hydraulic	65 (20)	600 (41)	102 (46)		24R512	24R513	24R515		
		12 VDC Electric, 1/2 HP	65 (20)	600 (41)	133 (60)		24R503	24R504	24R505		
		24 VDC Electric, 1/2 HP	65 (20)	600 (41)	133 (60)		24R506	24R507	24R508		
		115 VAC Electric	65 (20)	600 (41)	133 (60)		24R509	24R510	24R511		
	Waste Oil Evac.	Pneumatic	50 (15)	600 (41)	100 (56)		24R516	24R517	24R518	–	126380 – 1-1/4 in x 35 ft (32 mm x 11 m) 126688 – 1-1/4 in x 50 ft (32 mm x 15 m) 127173 – 1-1/2 in x 50 ft (38 mm x 15 m)
		Hydraulic	50 (15)	600 (41)	102 (46)		24R512	24R513	24R515		
		12 VDC Electric, 1/2 HP	50 (15)	600 (41)	133 (60)		24R503	24R504	24R505		
		24 VDC Electric, 1/2 HP	50 (15)	600 (41)	133 (60)		24R506	24R507	24R508		
		115 VAC Electric	50 (15)	600 (41)	133 (60)		24R509	24R510	24R511		
XD 8015	Diesel Fuel	Pneumatic	100 (50)	600 (41)	165 (75)		24R561	24R562	24R563	24R117	24T253 – 1-1/2 in x 100 ft (38 mm x 30 m)
		Hydraulic	100 (50)	600 (41)	143 (65)		24R558	24R559	24R560		
		12 VDC Electric, 1/2 HP	100 (50)	600 (41)	175 (79)		24R549	24R550	24R551		
		24 VDC Electric, 1/2 HP	100 (50)	600 (41)	175 (79)		24R552	24R553	24R554		
		115 VAC Electric	100 (50)	600 (41)	175 (79)		24R555	24R556	24R557		

Reel with Motor – 2 in (51 mm) Inlet/Outlet

XD 70 / XD 80 Reels

Reel Size	Fluid	Motor	Hose Capacity of Reel ft (m) Hose ID 2 in (51 mm)	Maximum Pressure psi (bar)	Weight lb (kg)	Inlet/ Outlet Size NPT(F)	Reel Part Number by Color: Metallic Blue	Yellow	White	Hose Accessories (Must be ordered separately): Hose Inlet Kit	Hose
XD 7020	Diesel Fuel	Pneumatic	33 (10)	600 (41)	128 (58)	2 in/2 in (51 mm/ 51 mm)	24T023	24T024	24T025	24R118	127167 – 2 in x 33 ft (51 mm x 10 m)
		Hydraulic	33 (10)	600 (41)	106 (48)		24T020	24T021	24T022		
		12 VDC Electric, 1/2 HP	33 (10)	600 (41)	137 (62)		24T011	24T012	24T013		
		24 VDC Electric, 1/2 HP	33 (10)	600 (41)	137 (62)		24T014	24T015	24T016		
		115 VAC Electric	33 (10)	600 (41)	137 (62)		24T017	24T018	24T019		
XD 8020		Pneumatic	50 (15)	600 (41)	169 (76)		24R576	24R577	24R578		24T254 – 2 in x 50 ft (51 mm x 15 m)
		Hydraulic	50 (15)	600 (41)	147 (67)		24R573	24R574	24R575		
		12 VDC Electric, 1/2 HP	50 (15)	600 (41)	179 (81)		24R564	24R565	24R566		
		24 VDC Electric, 1/2 HP	50 (15)	600 (41)	179 (81)		24R567	24R568	24R569		
		115 VAC Electric	50 (15)	600 (41)	179 (81)		24R570	24R571	24R572		

Remember to Order!

Ball Stop Kit
See page 259

Hose Guide
See page 259

Support Arm
See page 259

Hose
See page 260-261

Hose Inlet
See page 259

Ordering Information

Reel Frames Only

XD 60 / XD 70 / XD 80 Reels

Motor is not included and must be purchased separately.

Reel Size	Fluid	Hose Capacity of Reel ft (m)					Maximum Pressure psi (bar)	Weight lb (kg)	Inlet/ Outlet Size NPT(F)	Reel Part Number by Color		
		Hose ID in (mm)										
		1/2 (13)	3/4 (19)	1 (25)	1-1/2 (38)	2 (51)				Metallic Blue	Yellow	White
XD 6010	Air/Water/ Diesel Fuel	100 (30)	100 (30)	50 (15)	–	–	600 (41)	87 (39)	1 in/1 in (25 mm/25 mm)	24T104	24T105	24T106
	Oil	100 (30)	100 (30)	50 (15)	–	–	3,000 (207)	88 (40)		24T107	24T108	24T109
	Waste Oil Evac.	–	–	50 (15)	–	–	600 (41)	87 (39)		24T104	24T105	24T106
	Grease	–	–	50 (15)	–	–	3,000 (207)	88 (40)		24T107	24T108	24T109
XD 7010	Air/Water/ Diesel Fuel	–	–	100 (30)	–	–	600 (41)	86 (39)		24T110	24T111	24T112
	Oil	–	–	100 (30)	–	–	3,000 (207)	87 (39)		24T113	24T114	24T115
XD 8010	Air/Water/ Diesel Fuel	–	–	150 (46)	–	–	600 (41)	127 (58)		24T122	24T123	24T124
	Oil	–	–	150 (46)	–	–	3,000 (207)	129 (58)		24T125	24T126	24T127
XD 7015	Waste Oil Evac.	–	–	–	50 (15)	–	600 (41)	87 (39)	1-1/2 in/ 1-1/2 in (38 mm/38 mm)	24T116	24T117	24T118
	Diesel Fuel	–	–	–	65 (20)	–	600 (41)	87 (39)		24T116	24T117	24T118
XD 8015		–	–	–	100 (30)	–	600 (41)	129 (58)		24T128	24T129	24T130
XD 7020		–	–	–	–	33 (10)	600 (41)	91 (41)	2 in/2 in (51 mm/51 mm)	24T119	24T120	24T121
XD 8020		–	–	–	–	50 (15)	600 (41)	133 (60)		24T131	24T132	24T133

Motor Assemblies – Pair with Frame-Only Models

	Part Number	Description
	24T892	Pneumatic motor assembly, reversible type. For installing motor to bare XD reel.
	24T891	Hydraulic motor assembly, reversible type. For installing motor to bare XD reel.
	24T886	12 VDC, 1/2 HP motor assembly, reversible type. For installing motor to bare XD frame.
	24T910	12 VDC, 2/3 HP motor assembly, reversible type. For installing motor to bare XD frame.
	24T888	24 VDC, 1/2 HP motor assembly, reversible type. For installing motor to bare XD frame.
	24T911	24 VDC, 2/3 HP motor assembly, reversible type. For installing motor to bare XD frame.
	24T889	115 VAC, 0.40 HP motor assembly, reversible type. For installing motor to bare XD frame.

Remember to Order!

Ball Stop Kit	**Hose Guide**	**Support Arm**	**Hose**	**Hose Inlet**
See page 259	See page 259	See page 259	See page 260-261	See page 259

Ordering Information

Motor Controls (Required)

	Part Number	Description
	127271	Pneumatic valve to control XD 60/70/80 pneumatic powered hose reels. 2-position, 3-way valve.
	24T875	Hydraulic control module for electric over hydraulic control of XD 60/70/80 hydraulic powered hose reels, 12 VDC. 3-position, 4-way valve.
	24T876	Hydraulic control module for electric over hydraulic control of XD 60/70/80 hydraulic powered hose reels, 24 VDC. 3-position, 4-way valve.
	127224	Hydraulic control module for electric over hydraulic control of XD 60/70/80 hydraulic powered hose reels, 12V, includes switch. 3-position, 4-way valve.
	127225	Hydraulic control module for electric over hydraulic control of XD 60/70/80 hydraulic powered hose reels, 24V, includes switch. 3-position, 4-way valve.
	127214	Momentary push-button on/off switch with red rubber cap. Use for 12 or 24 VDC.
	127217	Hazardous-location push-button on/off switch. Use for 12 and 24 VDC.
	127223	Hazardous-location push-button on/off switch. Use for 115 and 220 VAC.
	127218	Hazardous-location junction box
	127219	12 VDC intermittent-duty solenoid recommended for activating rewind on 12 VDC motor
	127220	24 VDC intermittent-duty solenoid recommended for activating rewind on 24 VDC motor
	127221	Manual-reset push-button circuit breaker, 50 amp rating
	127222	Manual-reset push-button circuit breaker, 25 amp rating

Ordering Information

Ball Stop Kits

Part Number	Description
237873	Ball stop kit used for 3/4 in (19 mm) hose
237874	Ball stop kit used for 1 in (25 mm) hose
24R060	Ball stop kit used for 1.25 in (32 mm) hose
24R061	Ball stop kit used for 1.5 in (38 mm) hose

Hose Guide

Part Number	Description
24T327	Stainless steel hose guide for XD 60
24T328	Stainless steel hose guide for XD 70
24T329	Stainless steel hose guide for XD 80
24R072	Roller guide kit with bracket for XD 40 and XD 60
24T330	Roller guide kit with bracket for XD 70
24T331	Roller guide kit with bracket for XD 80

Support Arm Kit with Hose Guide

Part Number	Description
24T332	Arm kit with stainless steel hose guide for XD 60 (24T327)
24T333	Arm kit with stainless steel hose guide for XD 70 (24T328)
24T334	Arm kit with stainless steel hose guide for XD 80 (24T329)
24T335	Arm kit with roller guide for XD 60 (24R072)
24T336	Arm kit with roller guide for XD 70 (24T330)
24T337	Arm kit with roller guide for XD 80 (24T331)

Hose Inlet Kits

Part Number	Description
24R111	1 in (25 mm) hose inlet kit for air/water and oil 1,275 psi (88 bar), 1 in NPT hose inlet ID, 28 in (710 mm) long
24R112	1 in (25 mm) hose inlet kit for waste oil evacuation 250 psi (17 bar), 1 in NPT hose inlet ID, 28 in (710 mm) long
24R115	1 in (25 mm) hose inlet kit for diesel fuel 250 psi (17 bar), 1 in NPT hose inlet ID, 28 in (710 mm) long
24R117	1-1/2 in (38 mm) hose inlet kit for diesel fuel 150 psi (10 bar), 1-1/2 in NPT hose inlet ID, 28 in (710 mm) long
24R118	2 in (51 mm) hose inlet kit for diesel fuel 150 psi (10 bar), 2 in NPT hose inlet ID, 28 in (710 mm) long
24T858	1-1/2 in (38 mm) hose inlet kit for waste oil evacuation 150 psi (10 bar), 1-1/2 in NPT hose inlet ID, 28 in (710 mm) long

Self-Adhesive Identification Label Set

Part Number	Description
180698	Set includes: 1 in x 5 in (25.4 mm x 127 mm) hose reels labels for Antifreeze, Water, SAE 5-40, SAE 10-40, SAE 20W, Hydraulic, Gear, SAE 10W, SAE 10-30, SAE 30W, Dexron, Air, Chassis, ATF

Ordering Information

Hose Identification Wraps

Vinyl hose wrap for easy identification of meter fluid

	Part Number	Description
	17S659	Red
	17S660	Blue
	17S661	Green
	17S662	Yellow
	17S663	White

Air/Water/Antifreeze Hoses

	Part Number	Description	Compatible Reel Series
	253848	3/8 in x 35 ft (10 mm x 11 m) hose for air/water, 300 psi (20.6 bar)	SDX 10, XDX 10
	253849	3/8 in x 50 ft (10 mm x 15 m) hose for air/water, 300 psi (20.6 bar)	SDX 10, XDX 10
	253850	3/8 in x 65 ft (10 mm x 20 m) hose for air/water, 300 psi (20.6 bar)	SDX 20, XDX 20
	253852	1/2 in x 35 ft (13 mm x 11 m) hose for air/water, 300 psi (20.6 bar)	SDX 10, XDX 10
	253853	1/2 in x 50 ft (13 mm x 15 m) hose for air/water, 300 psi (20.6 bar)	SDX 20, XDX 20
	16A684	1/2 in x 75 ft (13 mm x 23 m) hose for air/water, 300 psi (20.6 bar)	XD 30
	126359	1/2 in x 100 ft (13 mm x 30 m) hose for air/water, 300 psi (20.6 bar)	XD 40, XD 60
	16A707	3/4 in x 50 ft (19 mm x 15 m) hose for air/water, 300 psi (20.6 bar)	XD 30
	126360	3/4 in x 75 ft (19 mm x 23 m) hose for air/water, 300 psi (20.6 bar)	XD 40
	126361	3/4 in x 100 ft (19 mm x 30 m) hose for air/water, 300 psi (20.6 bar)	XD 40, XD 60
	126362	1 in x 50 ft (25 mm x 15 m) hose for air/water, 300 psi (20.6 bar)	XD 40, XD 60
	126363	1 in x 75 ft (25 mm x 23 m) hose for air/water, 300 psi (20.6 bar)	XD 50
	126364	1 in x 100 ft (25 mm x 30 m) hose for air/water, 300 psi (20.6 bar)	XD 50, XD 70

Oil Hoses

	Part Number	Description	Compatible Reel Series
	26C121	1/2 in x 35 ft (13 mm x 11 m) hose for oil, 2,000 psi (138 bar)	SDX 10, XDX 10
	26C122	1/2 in x 50 ft (13 mm x 15 m) hose for oil, 2,000 psi (138 bar)	SDX 20, XDX 20
	26C123	1/2 in x 75 ft (13 mm x 23 m) hose for oil, 2,000 psi (138 bar)	XD 30
	26C124	1/2 in x 100 ft (13 mm x 30 m) hose for oil, 2,000 psi (138 bar)	XD 40, XD 60
	126376	3/4 in x 75 ft (19 mm x 23 m) hose for oil, 1,500 psi (103 bar)	XD 40, XD 60
	126377	3/4 in x 100 ft (19 mm x 30 m) hose for oil, 1,500 psi (103 bar)	XD 40, XD 60
	126503	1 in x 50 ft (25 mm x 15 m) hose for oil, 1,275 psi (88 bar)	XD 40, XD 60
	126504	1 in x 75 ft (25 mm x 23 m) hose for oil, 1,275 psi (88 bar)	XD 50
	126505	1 in x 100 ft (25 mm x 30 m) hose for oil, 1,275 psi (88 bar)	XD 70, XD 80

Ordering Information

Grease Hoses

Part Number	Description	Compatible Reel Series
109158	1/4 in x 50 ft (6 mm x 15m) hose for grease, 5,000 psi (345 bar)	SDX 10, XDX 10
124470	3/8 in x 35 ft (10 mm x 11 m) hose for grease, 4,800 psi (331 bar)	SDX 10, XDX 10
124461	3/8 in x 50 ft (10 mm x 15 m) hose for grease, 4,800 psi (331 bar)	SDX 20, XDX 20
126076	3/8 in x 75 ft (10 mm x 23m) hose for grease, 5,000 psi (345 bar)	XD 30
16A674	1/2 in x 50 ft (13 mm x 15 m) hose for grease, 5,000 psi (345 bar)	XD 30

Waste Oil Evacuation Hoses

Part Number	Description	Compatible Reel Series
16A686	1 in x 30 ft (25 mm x 9 m) hose for waste oil or fuel, 125 psi (9 bar)	XD 30
126379	1 in x 50 ft (25 mm x 15 m) hose for waste oil, 250 psi (17 bar)	XD 40, XD 60
126380	1 1/4 in x 35 ft (32 mm x 10.5 m) hose for waste oil, 200 psi (13.8 bar)	XD 50
126688	1 1/4 in x 50 ft (32 mm x 15 m) hose for waste oil, 200 psi (13.8 bar)	XD 50
127173	1 1/2 in x 50 ft (38 mm x 15 m) hose for waste oil, 200 psi (13.8 bar)	XD 50

Diesel Fuel Hoses

Part Number	Description	Compatible Reel Series
16A686	1 in x 30 ft (25 mm x 9 m) hose for waste oil or fuel, 125 psi (9 bar)	XD 30
24R102	1 in x 50 ft (25 mm x 15 m) hose for diesel fuel, 250 psi (17 bar)	XD 40, XD 60
24R103	1 in x 75 ft (25 mm x 23 m) hose for diesel fuel, 250 psi (17 bar)	XD 50
24R106	1 in x 100 ft (25 mm x 30 m) hose for diesel fuel, 250 psi (17 bar)	XD 50, XD 70
24T252	1 in x 150 ft (25 mm x 46 m) hose for diesel fuel, 250 psi (17 bar)	XD 80
24R108	1 1/4 in x 35 ft (32 mm x 10.5 m) hose for diesel fuel, 250 psi (17 bar)	XD 50
24R110	1 1/4 in x 50 ft (32 mm x 15 m) hose for diesel fuel, 250 psi (17 bar)	XD 50
24R114	1 1/2 in x 50 ft (38 mm x 15 m) hose for diesel fuel, 150 psi (11 bar)	XD 50
24T253	1 1/2 in x 100 ft (38 mm x 30 m) hose for diesel fuel, 150 psi (11 bar)	XD 80
127167	2 in x 33 ft (51 mm x 10 m) hose for diesel fuel, 150 psi (11 bar)	XD 80
24T254	2 in x 50 ft (51 mm x 15 m) hose for diesel fuel, 150 psi (11 bar)	XD 80

Diesel Exhaust Fluid (DEF) Hoses

Part Number	Description	Compatible Reel Series
125242	3/4 in x 50 ft (19 mm x 15 m) hose for DEF fluid, 50 psi (3 bar)	XD 30

Pressure Wash Hoses

Part Number	Description	Compatible Reel Series
16A688	3/8 in x 75 ft (10 mm x 23m) hose for pressure wash, 4,000 psi (276 bar)	XD 30
126075	1/2 in x 50 ft (13 mm x 15 m) hose for pressure wash, 4,500 psi (310 bar)	XD 30

Notes

FLUID RECLAIM EQUIPMENT

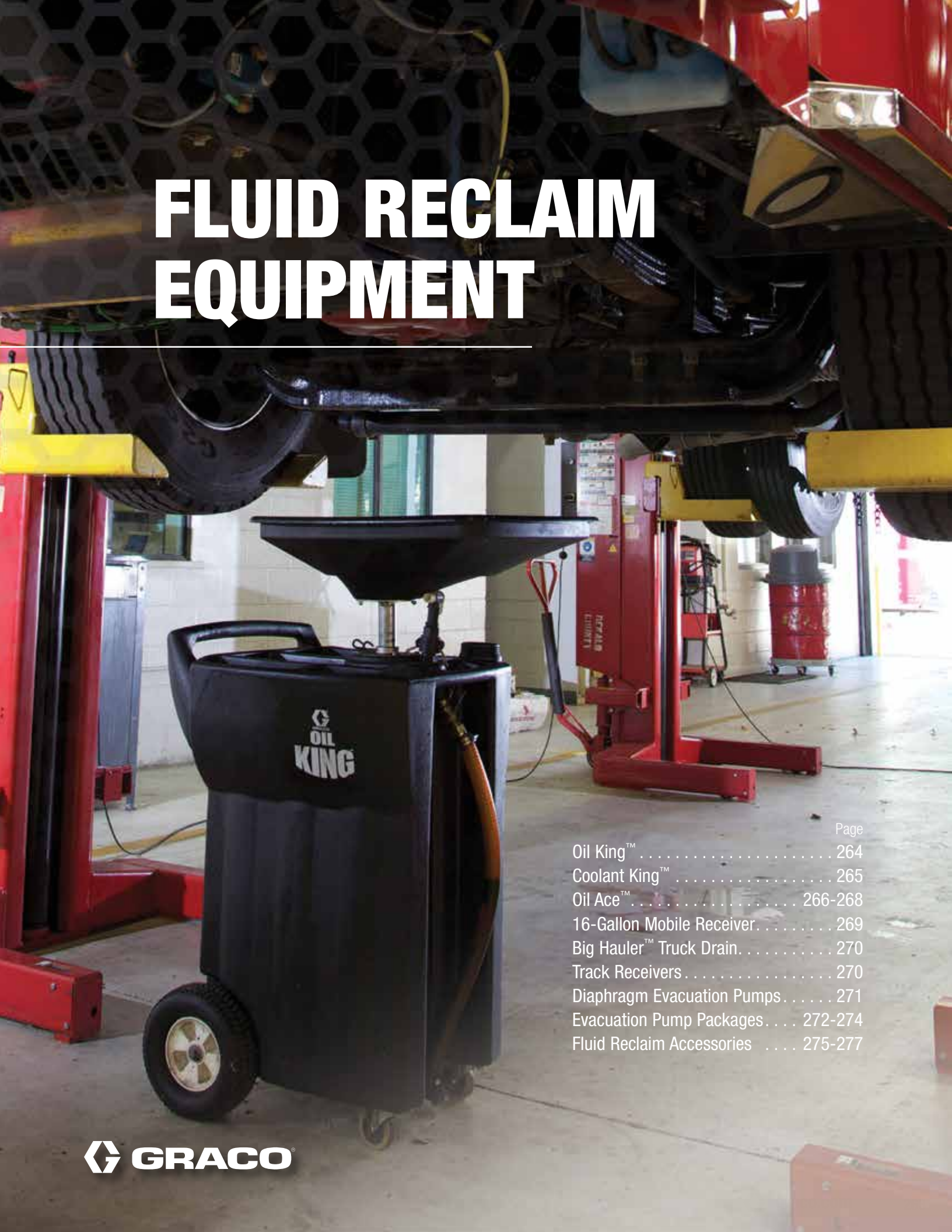

Page

Oil King™ 264
Coolant King™ 265
Oil Ace™ 266-268
16-Gallon Mobile Receiver 269
Big Hauler™ Truck Drain 270
Track Receivers 270
Diaphragm Evacuation Pumps 271
Evacuation Pump Packages 272-274
Fluid Reclaim Accessories 275-277

GRACO®

Convenient Used-Oil Receiver

Oil King is designed with the busy shop in mind. With oversized tires and push-pull handles it allows for smooth maneuvering. The large funnel can collect fluids from both a drain plug and a filter port at the same time.

5 Year Warranty!

Large Offset Collection Pan

This funnel can be raised to a maximum height of 72 in (183 cm) and is equipped with a filter screen to prevent debris from entering the tank.

Filter Drain Tray

Used filters are able to drain separately from the collection pan.

Convenient Tool Tray

Built-in holding bins for new or used filters, wrenches and rags all at your fingertips.

Liquid Sight Gauge

A full-length liquid level sight gauge lets you know when the tank is full.

Large 25-Gallon (94.6 l) Capacity Receiver

Made from a heavy-duty, durable UV stabilized polymer.
Dent-, rust- and corrosion-resistant.

Oversized Tires

Easily maneuver over hose and rough floors.

Two Evacuation Port Options

Choose from the gravity drain valve at the bottom or suction evacuation at the top.

Typical Applications

- Automotive dealerships
- Fast lube centers
- Service shops
- Heavy-duty dealerships
- Fleet services facilities

Typical Fluids Handled

- Used oil

Technical Specifications

Fluid	Used Oil
Fluid Capacity	25 gal (95 l)
Evacuation	Bottom – Gravity / Top – Suction
Receiver Material	Polyethylene
Length	24 in (60 cm)
Width	24 in (60 cm)
Height	45 to 72 in (1.1 to 1.8 m)
Funnel Size	22 x 24 in (50 x 56 cm)
Dry Weight	54 lb
Instruction Manual	308667

Ordering Information

Part Number	Description
238866	25 gal (95 l) used-oil receiver with used-filter tray, tool holders and sight gauge. Must use wall mount package (224873) for topside evacuation.

Must ship via truck.

Coolant King™

5 Year Warranty!

Durable Receiver

Coolant King is designed with the busy shop in mind. With oversized tires and push-pull handles it allows for smooth maneuvering. The full-length sight gauge lets you know when the tank is full.

Large Offset Collection Pan

This funnel can be raised to a maximum height of 72 in (183 cm) and is equipped with a filter screen to prevent debris from entering the tank.

Convenient Tool Tray

Built-in holding bins for shop tools at your fingertips.

Liquid Sight Gauge

A full-length liquid-level sight gauge lets you know when the tank is full.

Large 25-Gallon (94.6 l) Capacity Receiver

Made from a heavy-duty, durable UV stabilized polymer. Dent-, rust- and corrosion-resistant. Color specific for easy fluid identification.

Oversized Tires

Easily maneuver over hose and rough floors.

Two Evacuation Port Options

Choose from the gravity drain valve at the bottom or suction-evacuation at the top.

Typical Applications

- Automotive dealerships
- Fast lube centers
- Service shops
- Heavy-duty dealerships
- Fleet services facilities

Typical Fluids Handled

- Used antifreeze

Technical Specifications

Fluid	Antifreeze
Fluid Capacity	25 gal (95 l)
Evacuation	Bottom – Gravity / Top – Suction
Receiver Material	Polyethylene
Length	24 in (60 cm)
Width	24 in (60 cm)
Height	45 to 72 in (1.1 to 1.8 m)
Funnel Size	22 x 24 in (50 x 56 cm)
Dry Weight	54 lb
Instruction Manual	308667

Ordering Information

Part Number	Description
248632	25 gal (95 l) used-antifreeze receiver with used-filter tray, tool holders and sight gauge. Must use wall mount package (224873) for topside evacuation.

Must ship via truck.

Oil/ Used Oil

Pressurized Oil Drain

Drain, evacuate and transfer used oil reliably, quickly and in the most cost-effective manner.

5 Year Warranty!

Large Offset Collection Pan

23 inch (58 cm) diameter offset collection bowl gives you a 31 inch (79 cm) total reach.

Superior Maneuverability

Wider and thicker handle for comfort.

Easy to Drain

Pressurize using shop air for easy oil evacuation.

Large 24-Gallon (90 l) Capacity Receiver

Perfect for small to large shops without an evacuation system.

Liquid Sight Gauge

Easy-to-read tank-level gauge lets you know when the tank is full.

Large Casters

Easily move around rough shop floors.

Typical Applications

- Automotive dealerships
- Fast lube centers
- Service shops
- Heavy-duty dealerships
- Fleet services facilities

Typical Fluids Handled

- Used oil

Technical Specifications

Fluid	Used oil
Fluid Capacity	24 gal (91 l)
Evacuation	Pressurized
Receiver Material	Steel
Length	24 in (60 cm)
Width	16 in (40.6 cm)
Height	56 to 80 in (143.5 to 203 cm)
Funnel Size	24 in (61 cm) diameter
Dry Weight	74 lb
Instruction Manual	310864

Ordering Information

Part Number	Description
119577	24 gal (90 l) steel-tank pressurized oil drain

Vacuum-Assisted Oil Collection System

Large-capacity collection systems make removing drain plugs a thing of the past. Oil Ace models with optional sight chamber offer the technician a visual indication of the waste fluid quantity. This technology reduces the threat of costly damages caused by over- or under-torquing or cross-threading drain plugs.

Large Offset Collection Pan

Wide offset collection bowl prevents splashing.

Vacuum Gauge

Ensure peak performance with easy-to-read vacuum gauge.

Sight Glass

Inspect oil quality via large, clear evacuation chamber and verify amount extracted.

Easy to Drain

Pressurize using shop air for easy oil evacuation.

Vacuum Probes

Variety of flexible suction attachments and adapters included.

Large 24 Gallon (90 l) Capacity Receiver

Perfect for small to large shops without an evacuation system.

Typical Applications

- Automotive dealerships
- Fast lube centers
- Service shops
- Heavy-duty dealerships
- Fleet services facilities

Typical Fluids Handled

- Used oil

Technical Specifications

Fluid	Used oil
Tank Capacity	24 gallon (90 l)
Evacuation	Pressurized
Receiver Material	Steel
Length	24 in (61 cm)
Width	16 in (40.6 cm)
Height	39 to 70.8 in (99 to 180 cm)
Funnel Size	23.8 in (60 cm)
Dry Weight	50.7 to 73.2 lbs (23 to 33.2 kg)
Instruction Manual	310864

Ordering Information

	Part Number	Description
	26C061	24 gal (90 l) steel tank with suction probes and adapters
	26C062	24 gal (90 l) steel tank with suction probes, adapters and sight glass
	26C063	24 gal (90 l) steel tank with suction probes, adapters and oil drain funnel
	26C064	24 gal (90 l) steel tank with suction probes, adapters, sight glass and oil drain funnel

16-Gallon Mobile Receiver

Typical Applications

- Automotive dealerships
- Fast lube centers
- Service shops
- Heavy-duty dealerships
- Fleet services facilities

Typical Fluids Handled

- Used oil

Technical Specifications

Fluid	Used oil
Fluid Capacity	16 gal (61 l)
Evacuation	Gravity
Receiver Material	Steel (239302 does not include drum)
Manual	306449
Length	26 in (66 cm)
Width	23 in (58 cm)
Height	42 to 70 in (107 to 177 cm)
Funnel Size	23 x 23 in (58 x 58 cm)
Dry Weight	40 lb (18 kg)

Ordering Information

Part Number	Description
239301*	16 gal (60 l) Oil receiver with steel drum oil receiver
239302	16 gal (60 l) Oil receiver without drum

*Use with evacuation kit 224873 or 24E166. 240832 can be ordered separately for existing diaphragm pump evacuation systems.

Accessories

Funnel Kit

Part Number	Description
243650	Use with 238866, 239301, 239302 and 248632. Includes tray and pipe.

Wall-Mounted Funnel Drain

Part Number	Description
154616	Use with Pedestal Receiver 225272 to open automatic check-valve and drain used oil through wall to waste tank. Drain has 1-1/4 NPT(F) outlet.

Drum-Mounted Funnel Drain

Part Number	Description
156789	Use with Pedestal Receiver 225272 to open automatic check-valve and drain used oil into standard drum. Funnel drain has 2 in NPT bung fitting for use with 55 gal (210 l) or 16 gal (60 l) drums or 275 gallon (1,100 l) tanks.

ATF Drain Funnel

Part Number	Description
208009	Use with Pedestal Receiver 225272 to extend funnel reach. Use for draining transmissions. Not equipped with drain plug. 16 in x 24-1/2 in.

Big Hauler™ Truck Drain

Antifreeze | Oil/ Used Oil

Typical Applications

- Truck maintenance facility
- Heavy-duty dealerships
- Fleet services facilities

Typical Fluids Handled

- Antifreeze
- Used oil

Technical Specifications

Fluid	Antifreeze / Oil
Fluid Capacity	26 gal (98.4 l)
Evacuation	Gravity
Receiver Material	Steel
Length	42 in (106.7 cm)
Width	30 in (76.2 cm)
Height	9 to 11 in (22.9 to 27.9 cm)
Instruction Manual	309194

Ordering Information

Part Number	Description
244055*	Big Hauler truck drain specially designed for truck maintenance facilities

*Use with evacuation kit 224873 or 24E166. 240832 can be ordered separately for existing diaphragm pump evacuation systems.

Fluid Reclaim Equipment

Track Receivers

Oil/ Used Oil

Technical Specifications

Part Number	218969	235346
Fluid	Oil	Oil
Fluid Capacity	30 gal (113 l)	27 gal (102 l)
Evacuation	Gravity	Gravity
Receiver Material	Steel	Steel
Extension Range	37.5 to 46 in (0.95 to 1.17 m)	34.1 to 42.6 in (0.87 to 1.08 m)
Instruction Manual	307727	307727

Typical Applications

- Fast lube centers
- Fleet services facilities

Typical Fluids Handled

- Used oil

Ordering Information

Part Number	Description
218969	Specially designed for car and truck fast lube facilities where speed and mobility are important. Adjustable steel rollers fit track widths.
235346	Narrow rolling used-oil receiver, specially designed for car and truck fast lube facilities where speed and mobility are important. Adjustable steel rollers fit track widths. Same as 218969 except track width range.

Typical Applications

- Automotive dealerships
- Fast lube centers
- Service shops
- Heavy-duty dealerships
- Fleet services facilities

Typical Fluids Handled

- Used oil

Husky 1050

Husky 716

Technical Specifications

	Husky 716	Husky 1050
Maximum Fluid Working Pressure	100 psi (7.0 bar / 0.7 MPa)	100 psi (7.0 bar / 0.7 MPa)
Approximate Free Flow Rate @ 100 psi	16 gal/min (61 l/min)	50 gal/min (189 l/min)
Output per Cycle	0.04 gal (0.15 l)	0.17 gal (0.64 l)
Air Inlet	1/4 in	1/2 in
Fluid Inlet	3/4 in	1 in
Fluid Outlet	3/4 in	1 in
Maximum Pump Speed	400 cpm	275 cpm
Cycles per Gallon	25 cpg	5.9 cpg
Cycles per Liter	6.7 cpl	1.6 cpl
Wetted Parts	Buna-N, acetal, aluminum, stainless steel, PTFE, zinc-plated steel	Aluminum, TPC-ET, acetal, PTFE, Buna-N
Sound Pressure Level	85 dB(A)	96 dB(A)
Sound Power Level	95 dB(A)	90 dB(A)
Approximate Weight	8.5 lb (3.9 kg)	23 lb (10.5 kg)
Instruction Manual	308573	313597

Ordering Information

Part Number	Description
241906	Husky 716 Evacuation Pump
647731	Husky 1050 Evacuation Pump

Antifreeze | Oil/ Used Oil

Ordering Information

Wall Mount Packages

Package Number	24E166	25T815	224873
Diaphragm Pump	1050A (1 in) UL-listed	1050A (1 in) UL-listed	716 (3/4 in)
Pump Part Number	647731	647016	241906
Mounting Type	Wall Bracket	Wall Bracket	Wall Bracket
Mounting Part Number	24C637	24C637	224835
Fluid	Oil	Antifreeze	Antifreeze / Oil
Evacuation	Drum Adapter	Drum Adapter	Drum Adapter
Evacuation Part Number	240832	240832	240832
Air Installation Kit	240684	240684	240684
Fluid Installation Kit	240685	240685	240685
Instruction Manual	313597	313597	308719
Listings	UL, CE	UL, CE	–

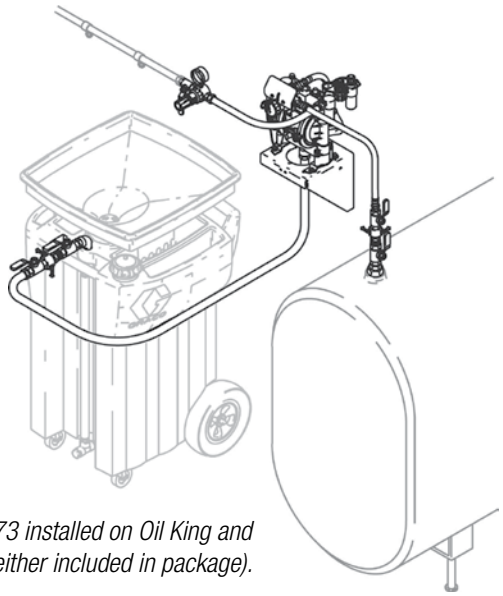

Package 224873 installed on Oil King and tank (neither included in package).

Ordering Information

Base Pump Packages

System evacuates lube from differential case using suction generated by a diaphragm pump. Nylon tubes ranging in size from 3/16 in OD to 1/2 in OD are included to fit through sight plug to completely drain the case. Evacuated gear lube is then pumped to waste tank. Piping and waste tank not included. Systems are fully groundable and bondable for safe transfer of used oil.

Package Number	224955	24E167	223695
Diaphragm Pump	716 (3/4 in)	1050A (1 in)	716 (3/4 in)
Pump Part Number	241906	647731	241906
Mounting Type	Base	Wall Bracket	Cart Hanger Bracket
Mounting Bracket/Kit	–	24C637	223697
Fluid	Gear Lube	Gear Lube	Gear Lube
Evacuation	Suction Wand	Suction Wand	Suction Wand
Evacuation Part Number	221146	221146	223696
Air Control Kit	110149	221147	–
Instruction Manual	308573	313597	308035 / 308573
Listings	CE	UL, CE	–
Notes	Order additional suction hose/ wand (221146) and additional control valve (220969) for each additional suction point. Order grounding clamp (222011) or use locally supplied grounding wires and clamps in accordance with applicable codes.	Order additional suction hose/ wand 221146 and additional control valve 220969 for each additional suction point. Order grounding clamp 222011 or use locally supplied grounding wires and clamps in accordance with applicable codes. See instruction manual 313597 for more information.	–

Ordering Information

Fas-Vac Mobile Packages

Package Number	224700	224701
Cart	224665	111470
Compatible Drum Size (Not included)	16 gal (60 l)	55 gal (200 l)
Pump	716 (3/4 in)	716 (3/4 in)
Pump Package	224667	224667
Fluid	Oil, Gear Lube	Oil, Gear Lube
Evacuation Kit	224669 / 224666	224702 / 224666
4-Way Valve	187359	187359
Port Size	1/2 NPT(F)	1/2 NPT(F)
Instruction Manual	308154	308154
Must be ordered separately (Not Included)		
Filter Regulator Lubricator (FRL)	110149	110149
FRL Mounting Kit	224759	224759

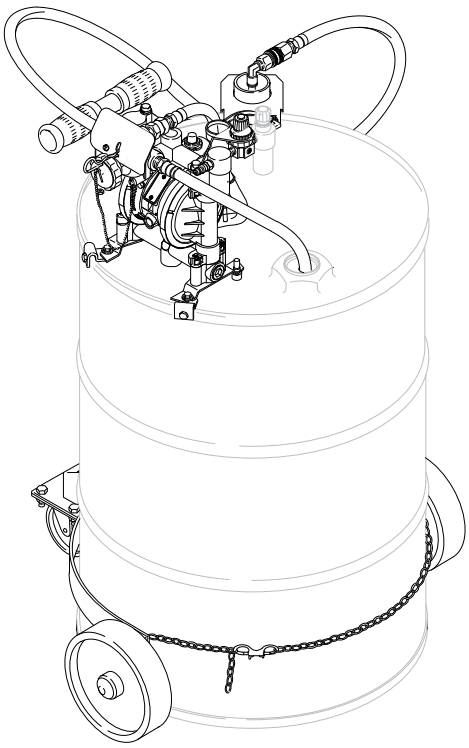

Package 224701 installed on oil drum (Drum and filter regulator not included in package)

Ordering Information

4-Way Evacuation Valve

Directional control valve used to simplify the filling and emptying of tanks

Features and Benefits

- Simplifies installation by eliminating need for multiple valves
- Unrestricted flow – no pressure or volume loss
- Two-position tank fill and emptying control
- Tapered, self-seating valve spool for superior sealing performance

Part Number	Description
120581	1 in NPT(F) 4-Way Evacuation Valve
120601	1-1/2 in NPT(F) 4-Way Evacuation Valve

Lube Truck/Holding Tank

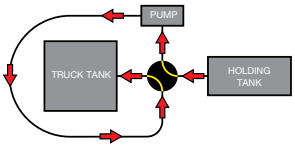

Lube Truck/Bulk Waste Tank

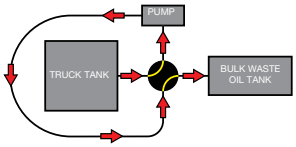

Air Regulators

Provides precision control of outlet air pressure. Feedback principle provides constant pressure to pump regardless of air demand rate and fluctuations in supply pressure. Additional fittings required (except air regulators with installation kits).

	Part Number	Description
	110318	1/4 NPT(FBE)
	110147	1/4 NPT(FBE) with gauge
	110234	3/8 NPT(FBE)
	109075	3/8 NPT(FBE) with gauge
	202858	3/8 NPT(M) x 1/2 NPSM(F) with gauge
	104266	1/2 NPT(FBE)
	244844	1/2 NPT(FBE) with gauge
	207755	3/4 NPT(FBE)
	244845	3/4 NPT(FBE) with gauge

Ordering Information

Air Filters and Drains

Centrifugal action 1/4, 3/8 and 1/2 NPT (with 20 micron filters); 3/4 NPT having 40 micron filters to remove water and foreign particles from air supply.

	Part Number	Description
	110146	1/4 NPT(FBE) Air Filter. Manual drain.
	106148	3/8 NPT(FBE) Air Filter. Auto-drain.
	106149	1/2 NPT(FBE) Air Filter. Manual drain.
	106150	3/4 NPT(FBE) Air Filter. Manual drain.
	106151	Automatic filter drain float-type, 1/4 NPT(M). Use with 106150, 112859 and 217074.
	127711	Automatic filter drain float-type. Use with 106148 and 106149. Sold in NA only.

Installation Kits

Installation kits include shut-off valve, regulators, gauges and fittings as necessary for normal installation.

	Part Number	Description
	218316	Installation kits for Fast-Flo, Fire-Ball or Husky 307, and 716 diaphragm pumps
	224512	Installation kits for Mini Fire-Ball 225 and Fire-Ball

Accessories Ordering Information

Additional Accessories

	Part Number	Description
	221146	10 ft (3.04 m) suction hose and quick coupler with four interchangeable 15 in (38.1 cm) suction wands. OD options: 3/16 in, 1/4 in, 3/8 in, 1/2 in. For use with Husky 716 or 1050 gear oil evacuation systems.
	223696	Four interchangeable 15 in (38.1 cm) suction wands. OD options: 3/16 in, 1/4 in, 3/8 in, 1/2 in. For use with part 223695 evacuation pump.
	224702	32 in suction wand. 1/2 in OD.
	224762	48 in (121.9 cm) suction wand kit with four interchangeable wands. OD options: 3/16 in, 1/4 in, 3/8 in, 1/2 in.
	224666	36 in suction wand storage kit
	218970	Tandem drain kit connects two rolling receivers for flow-through draining operation. Kit includes connector hose, shut-off valve, pipe nipple and quick-connect nipple. Instruction manual 307727.
	108491	Drain hose kit allows rolling used-oil receiver to be drained directly into the used-oil line. Kit is 24 in (0.6 m) in length with camlock coupler on one end.
	221007	Swing-Arm Drain Kit, used for servicing single rolling used-oil receiver (218969). When used with tandem drain kit (218970) it can service two receivers on a single track. Kit includes swivel elbow (108867), connector hose, dust cap (108203) and male adapter (108202).
	116229	Oil Tank Monitor. Shuts off air to the pump when tank is full.
	223888	6 ft (1.8 m) suction hose for ATF and antifreeze. Includes filter screen. Use with 223695.
	222011	Grounding clamp for all used-oil handling systems. Includes 25 ft (7.6 m) grounding wire.
	187359	4-way valve 1/2 NPT(F) ports

Notes

ACCESSORIES

	Page
Air Regulators and Valves	280
Air Valves	281
Hose Fittings	282
Lubrication Hoses	283
Air/Water Hoses	284
Quick Connect Fittings	285
Adapters and Fittings	286-287

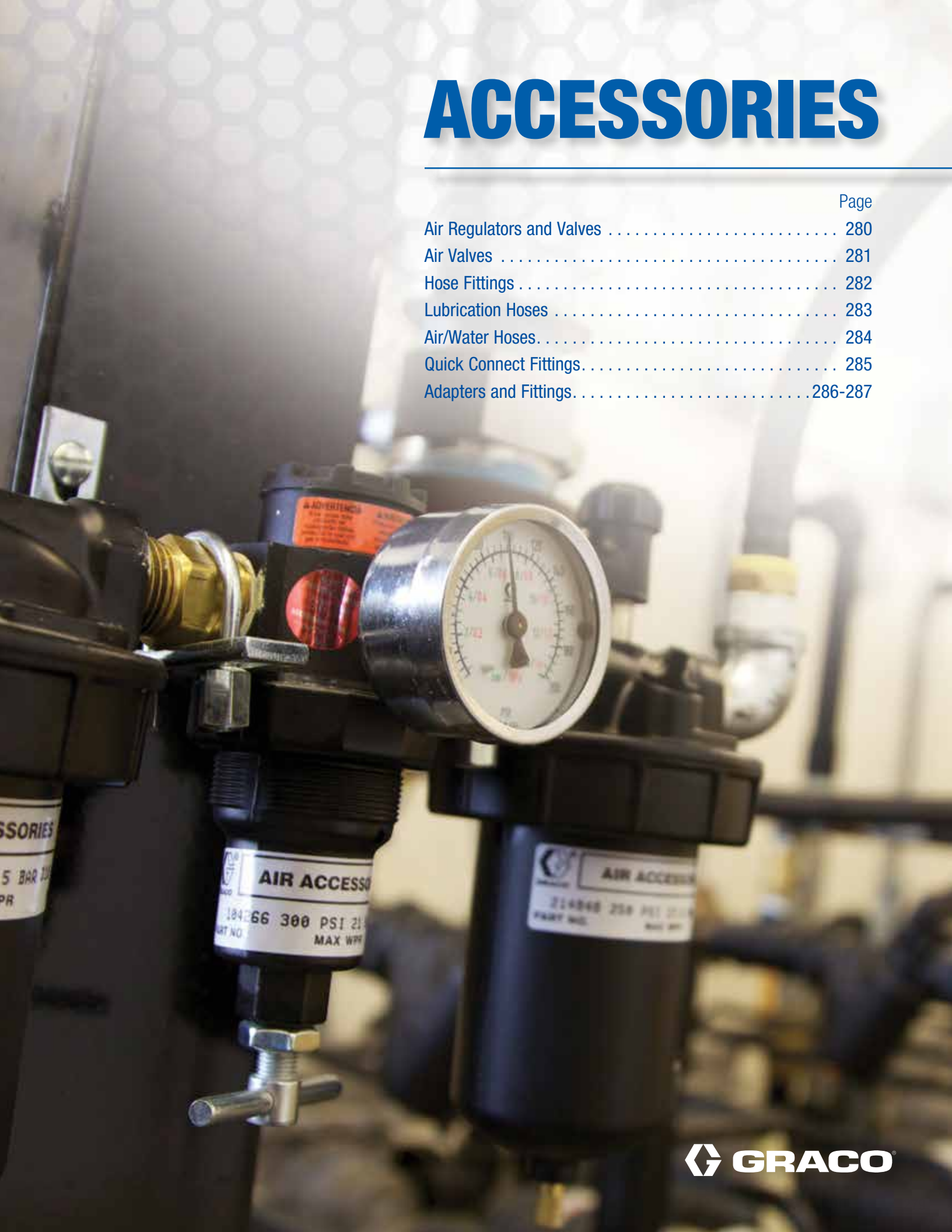

GRACO

Ordering Information

Air Filter-Regulator

Part Number	Inlet	Flow Range	Drain Type	Maximum Working Pressure
133215	1/4 in NPT(MBE)	20 cfm (550 lpm)	Semi-automatic	140 psi (9.65 bar)
133216	1/4 in NPT(MBE)	63 cfm (1,800 lpm)	Automatic	
133217	3/8 in NPT(MBE)	77 cfm (2,200 lpm)	Automatic	

FRL Combination Units

Each includes filter, regulator, pressure gauge, lubricator and connection fittings.

Part Number	Inlet
110149	1/4 in NPT(FBE)
110150	3/8 in NPT(FBE)
217072	1/2 in NPT(FBE)
217073	3/4 in NPT(FBE)

Bleed-Type Air Shut-Off Valves

Closes air inlet to pump and relieves trapped air pressure down line from valve. Recommended for each pump drop line.
Note: Be certain to install correctly. If installed backwards air will constantly escape from the valve. Maximum pressure of 250 psi (17 bar).

Thread	1/4 in	3/8 in	1/2 in	3/4 in
NPT(FBE)	110223	110224	110225	110226
NPT(MXF) inlet x outlet	–	–	107142	107141

Ball Valve-Type Air Shut-Off Valve – Non-Pressure Relieving

Part Number	Inlet	Maximum Working Pressure
208390	1/4 in NPT(MBE)	500 psi
208393	3/8 in NPT(MBE)	500 psi
208630	1/2 in NPT(M) x 3/8 in NPT(F)	500 psi
109077	3/4 in NPT(FBE)	600 psi
118464	1 NPT(FBE)	600 psi

Ordering Information

Air Needle Valve

Controls pump speed by restricting air flow to pump or other air-operated equipment.

Part Number	Inlet	Outlet
205090	1/4 in NPSM(M)	1/4 in NPSM(F)
206264	1/4 in NPT(M)	1/8 in NPT(F)

Air Pressure Relief Valve

Prevents pump from operating beyond recommended working pressure by opening at a pre-set maximum air pressure.

Part Number	Maximum Pressure Rating	Thread
110065	60 psi (4 bar)	1/4 in NPT(M)
103347	100 psi (6.9 bar)	1/4 in NPT(M)

Air Pressure Gauge

Allows visual check of air pressure being supplied to the pump. Rated to 200 psi (14 bar)

Part Number	Inlet	Color
110319	1/8 in NPT(M)	Black
100960	1/4 in NPT(M)	Black
101180	1/4 in NPT(M)	Chrome

Air Manifold

Supply several pumps from one supply line. Larger port delivery ensures adequate air flow to all pumps.

Part Number	Inlet Ports	Inlet Thread	Outlet Thread	Maximum Pressure Rating
158990	2	1/2 in NPT(F)	3/8 in NPT(F)	5,000 psi

Runaway Valve

Prevents pump damage by automatically closing the air line to stop the pump when a runaway pump condition occurs.

Part Number	Inlet
224040	3/4 in NPT(FBE)

Ordering Information

Blow Guns

Safety Blow Gun tip swivels freely and cannot be removed. Tip pressure will not exceed 30 psi (2 bar), adequate for cleaning. Maximum working pressure 150 psi (10 bar). Use with coupler 208536.

	Part Number	Description	Inlet
	236211	Air blow gun	1/4 in NPT(F)

Tire Inflators

	Part Number	Description	Includes			
			12 in Hose	Swivel Dual-Foot Chuck	Straight-On Chuck	Pop-Out Gauge
	236205	Heavy-Duty Tire-Inflator	Yes	Yes	–	Yes
	236206	Passenger Car Tire Inflator	Yes	–	Yes	Yes
	218545	Tire Chuck with 1/4 in NPT(F) inlet	–	–	–	–

Water Valve

Water/Antifreeze Bib is a durable, full-volume dispense nozzle for water, antifreeze and windshield washer fluid. Nitrile rubber seals.

	Part Number	Inlet	Pressure Rating
	180685	1/4 in NPT(F)	100 psi (7 bar)

Ordering Information

Heavy-Duty Reinforced Lubrication Hoses

For use with grease, oil and undercoating material. Hoses are black, male connections at both ends. Lubrication hoses listed are grounded for static electrical discharge.

ID Inch (mm)	Max PSI (bar)	Hose Length	Fitting		Part Number
			End 1 Thread NPT(M)	End 2 Thread NPT(M)	
1/4 (6.44)	5,000 (345)	12 in (0.3 m)	1/8	1/8	109145
		30 in (0.8 m)			109148
		24 in (0.8 m)	3/8	3/8	109147
		48 in (1.2 m)	1/4	1/4	109149
		72 in (1.8 m)			109150
		12 ft (3.6 m)			109151
		15 ft (4.6 m)			109152
		20 ft (6.1 m)		3/8	109153
		25 ft (7.6 m)		1/4	109154
		35 ft (10.6 m)		3/8	109156
		40 ft (12.2 m)			109157
		50 ft (15.3 m)			109158
3/8 (9.5)	4,000 (276)	12 in (0.3 m)	1/4	1/2	109160
		24 in (0.62 m)	3/8	3/8	109161
		48 in (1.2 m)			109162
		72 in (1.8 m)			109163
		15 ft (4.6 m)	1/4	1/4	109165
		40 ft (12.2 m)		3/8	109169
		50 ft (15.3 m)			109170
1/2 (12.7)	3,000 (207)	15 in (0.4 m)	1/2	1/2	110069
		18 in (0.5 m)			220598
		54 in (1.4 m)			220600
		72 in (1.8 m)			220591
		10 ft (3.1 m)			220590
		16 ft (4.9 m)			220592
		20 ft (6.1 m)			220593
		25 ft (7.6 m)			220608
		40 ft (12.2 m)			221092
		50 ft (15.3 m)			221093
		75 ft (22.9 m)		3/4	237861
3/4 (19.1)	2,250 (155)	18 in (0.4 m)	3/4	3/4	109108
		72 in (1.8 m)			109105
		10 ft (3.0 m)			111010
		75 ft (22.9 m)	1/2	1	237865
		50 ft (15.2 m)			237866
1 (25.4)	212 (14.6)	50 ft (15.2 m)	1	1	241908
1 (25.4)	125 (8.7)	50 ft (15.2 m)	1	1	249058

Air Water

Ordering Information

Air/Water Hoses

For use with low pressure air and water. Hoses are male NPT at both ends.

ID Inch (mm)	Max PSI (bar)	Hose Length	Fitting		Part Number
			End 1 Thread NPT(M)	End 2 Thread NPT(M)	
Fabric-Reinforced 1/4 (6.44)	180 (12.4)	18 in (0.5 m)	1/4	1/4	109123
		4 ft (1.2 m)			109124
		6 ft (1.8 m)			109125
		10 ft (3.1 m)			109126
		25 ft (7.6 m)		1/2	109127
		40 ft (12.2 m)			109128
		40 ft (12.2 m)	3/8	1/4	218491
3/8 (9.5)	180 (12.4)	18 in (0.5 m)	3/8	3/8	204560
		4 ft (1.2 m)			109130
		6 ft (1.8 m)			203320
		10 ft (3.1 m)			109131
		16 ft (4.9 m)	1/4	3/8	110326
		25 ft (7.6 m)	3/8	1/2	109132
		40 ft (12.2 m)			109134
		60 ft (18.3 m)			109135
1/2 (12.7)	180 (12.4)	22 in (0.56 m)	1/2	1/2	218093
		4 ft (1.2 m)			110046
		6 ft (1.8 m)			205418
		10 ft (3.1 m)			214656
1/2 (12.7)	300 (20.7)	25 ft (7.6 m)	1/2	1/2	248312
		50 ft (15.2 m)			248313
3/4 (19.1)	180 (12.4)	18 in (0.5 m)	3/4	3/4	110047
		4 ft (1.2 m)			110048
		6 ft (1.8 m)			208610
		10 ft (3.1 m)			214955
		25 ft (7.6 m)			208611

Ordering Information

Quick-Connect Coupler

Permits quick, convenient attachment of air supply hoses.

Part Number	Inlet	Body Size
208536	1/4 in NPT(F)	1/4 in
110198	3/8 in NPT(F)	1/4 in
110199	1/2 in NPT(F)	3/8 in
110200	3/4 in NPT(F)	1/2 in

Quick-Connect Nipple

Allows quick attachment of air supply hoses to pump motor.

Part Number	Inlet	Body Size
169967	1/4 in NPT(F)	1/4 in
169970	1/4 in NPT(M)	1/4 in
169971	3/8 in NPT(M)	1/4 in
110196	1/2 in NPT(M)	3/8 in
110197	3/4 in NPT(M)	1/2 in

Ordering Information

Bushings and Pipe Adapters – Reducing, Standard and Expanding

Outlet	Inlet					
	1/8 in NPT	1/4 in NPT	3/8 in NPT	1/2 in NPT	3/4 in NPT	1 in NPT
1/8 in NPT	150171	159840	156580	–	–	–
1/4 in NPT	100030	–	150287	159842	–	–
3/8 in NPT	–	159841	150286	156022	–	–
1/2 in NPT	–	100206	100081	–	168595	–
3/4 in NPT	–	100615	100505	100896	–	–
1 in NPT	–	–	–	100380	158586	–

Street Elbows

Part Number	Inlet/Outlet
100840	1/4 in NPT
155699	3/8 in NPT
158683	1/2 in NPT
176393	3/4 in NPT

Coupling – Standard

Part Number	Inlet
100451	1/8 in NPT
113093	1/4 in NPT
162024	3/8 in NPT
158581	1/2 in NPT
100385	3/4 in NPT
100474	1 in NPT

Hex Nipples – Standard and Reducing

Male End 2	Male End 1				
	1/4 in NPT	3/8 in NPT	1/2 in NPT	3/4 in NPT	1 in NPT
1/8 in NPT	151519	156296	159239	–	–
1/4 in NPT	156971	165198	162449	–	–
3/8 in NPT	–	156849	–	194048	–
1/2 in NPT	–	–	158491	157191	–
3/4 in NPT	–	–	–	175013	158555

Ordering Information

Square Head Plug

Part Number	Inlet
111697	1/4 in NPT
100040	3/8 in NPT
100737	1/2 in NPT
104663	3/4 in NPT

Swivel Adapters*

Rigid End	Swivel End	Straight Swivel Adapter (m x f)	Straight Swivel Adapter (f x f)	90° Swivel Adapter (f x f)	90° Swivel (m x f)	45° Swivel Adapter (m x f)
1/8 in	1/4 in	208434	–	–	–	–
1/4 in	1/4 in	156823	155570	157676	155541	–
	3/8 in	157705	–	–	–	–
3/8 in	1/4 in	–	159153	–	155495	–
	3/8 in	155665	156173	155677	155494	161889
	1/2 in	162505	–	159801	217430	–
1/2 in	1/4 in	–	155653	–	–	–
	3/8 in	158256-257	161077	–	161037	–
	1/2 in	156684	155865	157416	155470	–
3/4 in	3/4 in	157785	156172	156589	160327	105281
1 in	3/4 in	202965	–	–	–	–
	1 in	160022	158383	–	–	–

*Not a "live" swivel, position is stationary after tightened.

Tube Fittings

Maximum pressure rating of 3,000 psi (207 bar) with appropriate tubing wall thickness.

	Description	Inlet	Tube OD	
			5/8 in	7/8 in
	Tube Union Flow 90° Elbow	–	101012	101376
	Straight Tube Union	–	101009	101340
	Male Connector	3/4 in NPT	–	101339
	Straight Female Connector	1/2 in NPT	101008	–
	Tube Tee with Female Branch	5/8 in NPT	101013	–

Standard Graco Warranty

1-Year Warranty Policy

Graco warrants all equipment manufactured by Graco and bearing its name to be free from defects in material and workmanship on the date of sale by an authorized Graco distributor to the original purchaser for use. With the exception of any special, extended or limited warranty published by Graco, Graco will, for a period of twelve (12) months from the date of sale, repair or replace any part of the equipment determined by Graco to be defective.

This warranty applies only when the equipment is installed, operated and maintained in accordance with Graco's written recommendations. This warranty does not cover, and Graco shall not be liable for, general wear and tear, or any malfunction, damage or wear caused by faulty installation, misapplication, abrasion, corrosion, inadequate or improper maintenance, negligence, accident, tampering or substitution of non-Graco component parts. Nor shall Graco be liable for malfunction, damage or wear caused by the incompatibility of Graco equipment with structures, accessories, equipment or materials not supplied by Graco, or the improper design, manufacture, installation, operation or maintenance of structures, accessories, equipment or materials not supplied by Graco.

This warranty is conditioned upon the prepaid return of the equipment claimed to be defective to an authorized Graco distributor for verification of the claimed defect. If the claimed defect is verified, Graco will repair or replace free of charge any defective parts. The equipment will be returned to the original purchaser, transportation prepaid. If inspection of the equipment does not disclose any defect in material or workmanship, repairs will be made at a reasonable charge, which may include the costs of parts, labor and transportation.

THIS WARRANTY IS EXCLUSIVE AND IS IN LIEU OF ANY OTHER WARRANTIES, EXPRESS OR IMPLIED, INCLUDING BUT NOT LIMITED TO WARRANTY OF MERCHANTABILITY OR WARRANTY OF FITNESS FOR A PARTICULAR PURPOSE.

Graco's sole obligation and buyer's sole remedy for any breach of warranty shall be as set forth above. The buyer agrees that no other remedy (including but not limited to incidental or consequential damages for lost profits, lost sales, injury to person or property, or any other incidental or consequential loss) shall be available. Any action for breach of warranty must be brought within two (2) years of the date of sale.

Graco makes no warranty, and disclaims all implied warranties of merchantability and fitness for a particular purpose in connection with accessories, equipment, materials or components sold but not manufactured by Graco. These items sold but not manufactured by Graco (such as electric motors, switches, hoses, etc.) are subject to the warranty, if any, of their manufacturer. Graco will provide purchaser with reasonable assistance in making any claim for breach of these warranties.

In no event will Graco be liable for indirect, incidental, special or consequential damages resulting from Graco supplying equipment hereunder, or the furnishing, performance or use of any products or other goods sold hereto, whether due to a breach of contract, breach of warranty, the negligence of Graco or otherwise.

Graco Vehicle Service Equipment Group Extended Warranty

Graco warrants all equipment referenced in this document that is manufactured by Graco and bearing its name to be free from defects in material and workmanship on the date of sale to the distributor. Graco will, for a period as defined in the table on the opposite page from the date of sale, repair or replace equipment covered by this warranty and determined by Graco to be defective. This warranty applies only when the equipment is installed, operated and maintained in accordance with Graco's written recommendations.

This warranty does not cover, and Graco shall not be liable for, general wear and tear, or any malfunction, damage or wear caused by faulty installation, misapplication, abrasion, corrosion, inadequate or improper maintenance, negligence, accident, tampering or substitution of non-Graco component parts. Nor shall Graco be liable for malfunction, damage or wear caused by the incompatibility of Graco equipment with structures, accessories, equipment or materials not supplied by Graco, or the improper design, manufacture, installation, operation or maintenance of structures, accessories, equipment or materials not supplied by Graco.

This warranty is conditioned upon the prepaid return of the equipment claimed to be defective to an authorized Graco distributor for verification of the claimed defect. If the claimed defect is verified, Graco will repair or replace free of charge any defective parts. The equipment will be returned to the original purchaser, transportation prepaid. If inspection of the equipment does not disclose any defect in material or workmanship, repairs will be made at a reasonable charge, which may include the costs of parts, labor and transportation.

THIS WARRANTY IS EXCLUSIVE AND IS IN LIEU OF ANY OTHER WARRANTIES, EXPRESS OR IMPLIED, INCLUDING BUT NOT LIMITED TO WARRANTY OF MERCHANTABILITY OR WARRANTY OF FITNESS FOR A PARTICULAR PURPOSE.

Graco's sole obligation and buyer's sole remedy for any breach of warranty shall be as set forth above. The buyer agrees that no other remedy (including but not limited to incidental or consequential damages for lost profits, lost sales, injury to person or property, or any other incidental or consequential loss) shall be available. Any action for breach of warranty must be brought within one (1) year post the warranty period.

GRACO MAKES NO WARRANTY, AND DISCLAIMS ALL IMPLIED WARRANTIES OF MERCHANTABILITY AND FITNESS FOR A PARTICULAR PURPOSE, IN CONNECTION WITH ANY ACCESSORIES, EQUIPMENT, MATERIALS OR COMPONENTS SOLD BUT NOT MANUFACTURED BY GRACO.

These items sold but not manufactured by Graco (such as electric motors, switches, etc.) are subject to the warranty, if any, of their manufacturer. Graco will provide purchaser with reasonable assistance in making any claim for breach of these warranties.

In no event will Graco be liable for indirect, incidental, special or consequential damages resulting from Graco supplying equipment hereunder, or the furnishing, performance or use of any products or other goods sold hereto, whether due to a breach of contract, breach of warranty, the negligence of Graco or otherwise.

FOR GRACO CANADA CUSTOMERS

The parties acknowledge that they have required that the present document, as well as all documents, notices and legal proceedings entered into, given or instituted pursuant hereto or relating directly or indirectly hereto, be drawn up in English.

Les parties reconnaissent avoir convenu que la rédaction du présente document sera en Anglais, ainsi que tous documents, avis et procédures judiciaries exécutés, donnés ou intentés à la suite de ou en rapport, directement ou indirectement, avec les procedures concernées.

Graco Vehicle Service Equipment Group Extended Warranty (cont.)

		Warranty Period
	Oil King, Coolant King, and Oil Ace	5 Years
	Pulse Fluid Management Hubs, TLMs, PACs and Extenders	2 Years
REELS	**Cord and Light Reels**	2 Years
REELS	Electrical Components	1 Year
REELS	**LD Series Hose Reels**	5 Years
REELS	Wear Parts, including but not limited to hose, seals, swivel seats and roller guides	1 Year
REELS	**SDX Series Hose Reels**	7 Years
REELS	Power Springs	3 Years
REELS	Wear Parts, including but not limited to hose, seals, swivel seats and roller guides	1 Year
REELS	**XD Series Hose Reels**	7 Years
REELS	Power Springs	3 Years
REELS	Wear Parts, including but not limited to hose, seals, swivel seats, roller guides and motors	1 Year
METERS	**Mechanical Meters**	5 years
METERS	Wear parts, including but not limited to o-rings, seals and valves	1 Year
METERS	**LD Preset Meters**	5 years
METERS	Electronics	2 Years
METERS	Wear parts, including but not limited to o-rings, seals and valves	1 Year
METERS	**SD Meters and Valves**	5 Years
METERS	Electronics	3 Years
METERS	Wear parts, including but not limited to o-rings, seals and valves	1 Year
METERS	**EM Meters and Valves / Pulse Meters and Valves**	5 Years
METERS	Electronics	3 Years
METERS	Wear parts, including but not limited to o-rings, seals, valves and trigger locks	1 Year
PUMPS	**LD Oil/Grease Pumps**	5 Years
PUMPS	Wear Parts, including but not limited to o-rings, packings and seals	1 Year
PUMPS	Hoses with pump packages	1 Year
PUMPS	**AODD Pumps**	5 Years
PUMPS	Wear Parts, including but not limited to o-rings, packings and seals	1 Year
PUMPS	Hoses with pump packages	1 Year
PUMPS	**Mini Fire-Ball 225 and Fire-Ball 300 Oil and Grease Pumps**	7 Years
PUMPS	Wear Parts, including but not limited to o-rings, packings and seals	1 Year
PUMPS	Hoses with pump packages	1 Year
PUMPS	**Fire-Ball 425 Oil and Grease Pumps**	10 Years
PUMPS	Wear Parts, including but not limited to o-rings, packings and seals	1 Year
PUMPS	Hoses with pump packages	1 Year
PUMPS	**Fast-Ball and Fast-Flo Oil Pumps**	5 Years
PUMPS	**LD Blue and SD Blue Diesel Exhaust Fluid Pumps**	2 Years

Index

Part No.	Page No.
15C502	53, 69
15M308	15, 25
15T366	15, 25, 100
15T367	15, 25, 100
15T368	15, 25, 100
15T369	15, 25, 100
15T370	15, 25, 100
15Y478	236
16A674	261
16A684	260
16A686	261
16A688	261
16A707	260
16F769	144
16F781	144
16F784	144
16F878	19, 25, 35, 37, 38, 44, 45, 50
16F885	35, 39, 40, 46, 47, 50
16F886	35, 36, 37, 43, 50
16G760	176
16N883	232
16P999	232
17C270	54
17C907	185, 186
17C908	185, 186
17F878	18
17R220	15, 24, 99, 108
17S659	15, 25, 91, 94, 97, 100, 228, 237, 242, 248, 260
17S660	15, 25, 91, 94, 97, 100, 228, 237, 242, 248, 260
17S661	15, 25, 91, 94, 97, 100, 228, 237, 242, 248, 260
17S662	15, 25, 91, 94, 97, 100, 228, 237, 242, 248, 260
17S663	15, 25, 91, 94, 97, 100, 228, 237, 242, 248, 260
17T207	15, 24, 94, 97, 99
18F169	97
18F170	97
18F174	97
18F175	97
20A058	18
24A217	227, 231
24A218	227
24A219	236
24A220	236
24A221	236
24A222	236
24A224	237
24A934	228, 231
24A935	228, 231
24A936	228, 231
24A937	228, 231
24A938	228, 231
24A939	228, 231
24A940	227, 231
24A941	227, 231
24A942	227, 231
24A943	227, 231
24A944	227, 231
24A945	227
24A946	227
24A947	227
24A948	227
24A949	227
24A950	227, 231, 237
24A951	227, 237
24B624	200
24B632	200
24B634	200
24B639	200
24B768	200
24C100	228
24C443	220
24C444	219, 220
24C537	219, 220
24C538	219, 220
24C539	219, 220
24C637	198, 200, 272, 273
24C772	219
24D132	236, 241
24D133	236, 241
24D147	198
24D205	199
24D590	75
24D591	75
24D592	79
24D593	79
24D595	79
24D596	75
24D597	75
24D598	79
24D599	79
24D601	79
24D602	75
24D603	75
24D604	79
24D605	79
24D608	79
24D989	227
24D990	227
24D991	227
24D992	227
24D993	227
24D994	227
24D995	226
24D996	226
24D997	226
24D998	227
24D999	227
24E001	226
24E002	226
24E006	151
24E007	151
24E008	151
24E009	151
24E010	151
24E011	151
24E166	269, 270, 272
24E167	273
24E283	240, 241
24E284	240, 241
24E285	240, 241, 242
24E780	152
24E781	152
24E782	152
24E823	242
24E824	242
24F205	55
24F206	55
24F524	183
24F529	173, 174, 179
24F531	173
24F532	173, 174, 184
24F679	174, 182
24F737	219
24F738	219
24F739	219
24F740	219
24F741	219
24F742	219
24F743	219
24F755	219
24F756	219
24F757	219
24F758	219
24F759	219
24F760	219
24F761	219
24F773	219
24F774	219
24F775	219
24F776	219
24F777	219
24F778	219
24F779	219
24F870	173, 182
24F878	173
24F901	118, 122, 125, 130, 144
24F902	119, 120, 122, 126, 131, 132, 144
24F903	120, 122, 126, 132, 144
24F904	50, 118, 122
24F905	50, 119, 120, 122
24F906	50, 120, 122
24F910	38, 45, 51
24F914	39, 40, 46, 47, 51
24F915	19, 25, 36, 43, 50, 120, 122
24F918	35, 51, 53
24F920	39, 46, 51
24F930	39, 40, 46, 47, 51
24F931	39, 46, 51
24F932	51
24F935	38, 45, 51
24F947	174
24G576	19, 25, 35, 37, 38, 39, 41, 42
24G579	35, 38
24G582	35, 36, 43
24G585	35, 40
24G588	35, 44, 45, 46, 47, 48, 49
24G591	35, 45
24G594	35
24G597	35
24G600	117, 118
24G603	117, 119
24G606	117, 120
24G636	175
24G738	103, 173, 176
24G745	172, 173, 174
24G862	120
24G865	219
24G866	219
24H193	228, 232
24H292	176
24H293	174, 176
24H420	19, 25, 36, 37, 38, 39, 40, 41, 42, 43, 46, 47, 48, 49, 50, 118, 119, 120, 122
24H422	119, 122
24H606	122
24H655	220
24H656	220
24H657	219, 220
24H658	219, 220
24H659	219, 220
24H660	219, 220
24H661	219, 220
24H662	219, 220
24H663	119, 219, 220
24H666	38, 45, 51
24H669	39, 46, 51
24H689	38
24H695	38
24H702	39
24H704	39
24H726	39
24H728	39
24H751	36
24H753	36
24H775	36
24H777	36
24H799	38
24H800	38
24H801	38
24H802	38
24H836	45
24H842	45
24H858	122
24H859	38, 45, 50
24H862	118, 119, 120, 122
24H865	19, 25, 36, 37, 43, 44, 50, 122
24H868	46
24H870	46
24H892	46
24H894	46
24H915	43
24H916	43
24H917	43
24H918	43
24H940	43
24H941	43
24H942	43
24H943	43

Index

Part No.	Page No.
24H964	45
24H965	45
24H966	45
24H967	45
24J030	118
24J036	119
24J042	120
24J048	119
24J054	120
24J060	119
24J066	120
24J487	122
24J495	36, 39, 40, 42, 43, 47, 49
24J501	119, 120, 122
24J733	41
24J734	41
24J735	48
24J736	48
24J776	41
24J777	48
24K285	39, 40, 46, 51
24K777	42
24K796	49
24K797	42
24K798	49
24K799	42
24K800	49
24K834	42
24K835	49
24K836	41
24K837	48
24K838	40
24K839	47
24K842	40
24K843	47
24K860	200
24K901	200
24K932	200
24K937	200
24M499	174
24N323	236
24N324	236
24N325	236
24N326	236
24N327	236
24N328	236
24N331	237
24N332	237
24N333	237
24N334	237
24N335	237
24N336	237
24N337	237
24N339	237
24N340	237
24N341	237
24N342	237
24N343	237
24N444	228, 232
24N674	231
24N675	231
24N682	231
24N683	231
24N684	231
24N685	231
24N686	232
24N690	231
24N691	231
24N814	232
24P164	232
24P313	246
24P315	246
24P316	246
24P317	246
24P318	246
24P319	246
24P320	246
24P322	246
24P323	246
24P324	246
24P325	246
24P326	246
24P327	246
24P328	246
24P329	246
24P330	246
24P331	246
24P332	246
24P333	246
24P334	246
24P335	246
24P336	246
24P337	246
24P338	246
24P339	246
24P340	246
24P341	246
24P342	246
24P343	246
24P344	246
24P345	246
24P346	246
24P347	246
24P348	246
24P349	246
24P350	246
24P351	246
24P352	246
24P353	246
24P354	246
24P355	246
24P356	246
24P455	247
24P456	247
24P457	247
24P458	247
24P459	247
24P460	247
24P461	247
24P462	247
24P463	247
24P464	247
24P465	247
24P466	247
24P467	247
24P468	247
24P469	247
24P470	247
24P471	247
24P472	247
24P473	247
24P474	247
24P475	247
24P476	247
24P477	247
24P478	247
24P479	247
24P480	247
24P481	247
24P482	247
24P483	247
24P484	247
24P485	247
24P486	247
24P487	247
24P488	247
24P489	247
24P490	247
24P491	247
24P492	247
24P493	247
24P494	247
24P495	247
24P496	247
24P497	247
24P498	247
24P499	247
24P623	122
24P880	232
24P881	232
24P914	237
24P984	246
24P985	246
24P986	246
24P987	247
24P988	247
24P989	247
24R060	248, 259
24R061	248, 259
24R072	248, 259
24R074	248
24R076	248
24R077	248
24R102	254, 261
24R103	255, 261
24R106	255, 261
24R108	261
24R110	256, 261
24R111	246, 247, 248, 254, 255, 259
24R112	246, 248, 254, 259
24R114	256, 261
24R115	246, 247, 248, 254, 255, 259
24R117	247, 248, 256, 259
24R118	256
24R350	54, 58, 69, 125, 126, 130, 131, 132, 143, 152
24R404	254
24R405	254
24R406	254
24R407	254
24R408	254
24R409	254
24R410	254
24R412	254
24R413	254
24R414	254
24R415	254
24R416	254
24R419	254
24R420	254
24R421	254
24R422	254
24R423	254
24R424	254
24R425	254
24R426	254
24R427	254
24R428	254
24R429	254
24R430	254
24R431	254
24R432	254
24R433	254
24R434	254
24R435	254
24R436	254
24R437	255
24R438	255
24R439	255
24R440	255
24R441	255
24R442	255
24R443	255
24R444	255
24R445	255
24R446	255
24R447	255
24R448	255
24R449	255
24R450	255
24R451	255
24R452	255
24R453	255
24R454	255
24R455	255
24R456	255
24R457	255
24R458	255

Index

Part No.	Page No.
24R459	255
24R460	255
24R461	255
24R462	255
24R463	255
24R464	255
24R465	255
24R466	255
24R503	256
24R504	256
24R505	256
24R506	256
24R507	256
24R508	256
24R509	256
24R510	256
24R511	256
24R512	256
24R513	256
24R515	256
24R516	256
24R517	256
24R518	256
24R519	255
24R520	255
24R521	255
24R522	255
24R523	255
24R524	255
24R525	255
24R526	255
24R527	255
24R528	255
24R529	255
24R530	255
24R531	255
24R532	255
24R533	255
24R534	255
24R535	255
24R536	255
24R537	255
24R538	255
24R539	255
24R540	255
24R541	255
24R542	255
24R543	255
24R544	255
24R545	255
24R546	255
24R547	255
24R548	255
24R549	256
24R550	256
24R551	256
24R552	256
24R553	256
24R554	256
24R555	256
24R556	256
24R557	256
24R558	256
24R559	256
24R560	256
24R561	256
24R562	256
24R563	256
24R564	256
24R565	256
24R566	256
24R567	256
24R568	256
24R569	256
24R570	256
24R571	256
24R572	256
24R573	256
24R574	256
24R575	256
24R576	256
24R577	256
24R578	256
24R854	246
24R855	246
24R856	246
24R857	246
24R859	246
24R860	246
24R861	246
24R862	246
24R863	246
24T011	256
24T012	256
24T013	256
24T014	256
24T015	256
24T016	256
24T017	256
24T018	256
24T019	256
24T020	256
24T021	256
24T022	256
24T023	256
24T024	256
24T025	256
24T104	257
24T105	257
24T106	257
24T107	257
24T108	257
24T109	257
24T110	257
24T111	257
24T112	257
24T113	257
24T114	257
24T115	257
24T116	257
24T117	257
24T118	257
24T119	257
24T120	257
24T121	257
24T122	257
24T123	257
24T124	257
24T125	257
24T126	257
24T127	257
24T128	257
24T129	257
24T130	257
24T131	257
24T132	257
24T133	257
24T252	255, 261
24T253	256, 261
24T254	256, 261
24T327	259
24T328	259
24T329	259
24T330	259
24T331	259
24T332	259
24T333	259
24T334	259
24T335	259
24T336	259
24T337	259
24T875	258
24T876	258
24T886	257
24T888	257
24T889	257
24T891	257
24T892	257
24T910	257
24T911	257
24U227	207
24U228	207
24U947	105
24U950	105
24U953	105
24U956	105
24U959	105
24V034	55, 105
24V037	105
24V040	105
24V043	105
24V046	105
24V049	105
24V052	106
24V055	106
24V058	106
24V641	171
24V644	171
24V645	171
24V646	171
24V656	171
24V677	173
24V678	173
24V679	174
24V686	174
24W140	186
24W141	186
24W142	186
24W143	186
24W144	186
24W145	186
24W148	174, 182
24W149	173, 182
24W154	174, 182
24W161	171, 173, 182
24W185	174
24W186	173
24W190	182
24W250	181, 240, 242
24W251	181, 242
24W306	106
24W337	147
24W498	147
24W515	207
24W641	106
24Y859	230
24Y861	230
24Y862	230
24Y863	230
24Y864	230
24Y865	230
24Y866	230
24Y868	230
24Y869	230
24Y870	230
24Y871	230
24Y872	230
24Y880	230
24Y882	230
24Y883	230
24Y884	230
24Y886	230
24Y887	230
24Z125	106
24Z126	106
24Z127	106
24Z128	106
24Z129	106
24Z130	106
24Z131	106
24Z132	106
24Z133	106
24Z257	19, 25
24Z676	17
24Z677	17
24Z728	17, 19
24Z978	12, 19

Index

Part No.	Page No.
25A857	200
25A874	200
25C548	119
25C549	118
25C550	37
25C551	37
25C552	37
25C553	37
25C554	44
25C555	44
25C556	44
25C557	44
25C841	101
25C903	36, 37, 39, 41, 55, 93
25C904	36, 41, 43, 49, 93
25C905	93
25C915	93
25C916	93
25C918	93
25C919	93
25D116	147
25D121	19, 25
25D130	19, 25
25D433	93
25D436	93
25D437	93
25D625	19
25D906	15, 25, 97
25D934	94
25D936	94
25M317	15, 19, 25
25M318	15
25M319	15, 19, 25
25M320	15
25M323	15
25M324	15
25M326	15, 19, 25
25M328	15
25M329	15
25M330	15
25M404	59, 99, 226
25M405	99
25M406	99, 226
25M407	99
25M410	99
25M411	99
25M413	54, 58, 99
25M415	99
25M416	99
25M417	99
25M449	16, 19
25N415	19
25P544	147
25R975	13
25R976	13
25R977	13
25R978	13
25R979	13
25R980	13
25R981	13
25S071	152
25T460	26
25T461	26
25T462	26
25T817	213
25T818	213
25T819	213
25T820	213
25T822	213
25U000	97
25U085	96
25U086	96
25U346	213
25U369	222
25U370	180, 222
25U371	41, 48, 222
25U372	222
26A140	246
26A141	246
26A142	246
26A143	247
26A144	247
26C061	268
26C062	268
26C063	268
26C064	268
26C121	260
26C122	260
26C123	260
26C124	260
26C169	118
26C170	119
26C171	120
26C172	170
26C173	170
26C174	170
26C175	170
26C183	131
26C184	131, 142, 160
26C185	131
26C186	131
26C267	15, 24, 94, 97, 99
26C268	15, 24, 94, 97, 99
26C354	24, 99
26C355	24, 99
26C356	24, 99
26C357	24, 99
26C358	24, 99
26C360	24, 99
26C361	24, 99
26C384	24, 59, 99
26C385	24, 99
26C399	25
26C401	22
26C409	25
26C525	93
100030	286
100040	287
100054	164, 165
100081	286
100206	132, 286
100220	68
100380	286
100385	286
100451	286
100474	286
100505	286
100615	286
100737	287
100833	164, 165
100834	164
100835	164
100837	165
100840	286
100846	164, 165
100847	164, 165
100848	164
100854	165
100896	94, 286
100960	63, 64, 67, 129, 137, 138, 139, 203, 281
100961	67
100962	67
100970	164, 165
100971	164
101008	287
101009	287
101012	287
101013	287
101078	67, 70
101180	281
101277	164
101281	164
101283	164
101287	165
101297	165
101312	165
101339	287
101340	287
101376	287
101496	71, 210
101604	165
101605	165
102527	72
103347	281
103538	207
104266	63, 64, 67, 137, 139, 275
104655	210
104663	287
104815	210
105281	287
105474	29
106148	59, 67, 118, 119, 120, 199, 276
106149	67, 199, 207, 211, 276
106150	199, 207, 276
106151	276
107141	280
107142	207, 280
108190	197
108202	277
108203	277
108458	29, 67, 69, 103
108491	277
108537	63, 67, 69
108867	277
109067	142
109075	54, 55, 58, 59, 60, 67, 125, 126, 130, 131, 132, 133, 134, 138, 139, 142, 275
109077	280
109105	70, 71, 198, 210, 283
109108	70, 210, 283
109123	210, 284
109124	284
109125	66, 197, 198, 210, 284
109126	284
109127	284
109128	284
109130	284
109131	284
109132	284
109134	284
109135	284
109145	142, 160, 162, 163, 283
109147	283
109148	145, 160, 163, 283
109149	283
109150	126, 132, 133, 134, 142, 283
109151	125, 126, 130, 131, 142, 283
109152	283
109153	283
109154	131, 283
109156	283
109157	283
109158	261, 283
109160	283
109161	283
109162	283
109163	72, 137, 138, 139, 140, 141, 142, 283
109165	129, 142, 283
109167	129
109169	283
109170	283
110025	29
110046	284
110047	284
110048	75, 79, 284
110065	281
110069	283
110127	72
110146	67, 197, 199, 276
110147	67, 173, 174, 198, 199, 275
110148	67
110149	67, 273, 274, 280
110150	67, 280
110196	199, 285
110197	199, 285
110198	129, 142, 285
110199	199, 285

Index

Part No.	Page No.
110200	199, 285
110201	162
110202	162
110203	162
110216	162
110218	162
110223	67, 68, 142, 173, 174, 198, 199, 280
110224	67, 68, 134, 142, 199, 280
110225	63, 67, 68, 141, 142, 198, 199, 280
110226	68, 142, 199, 280
110234	129, 142, 203, 275
110236	111
110237	111
110285	111
110314	69
110318	197, 275
110319	281
110326	284
110702	164
110703	165
110705	165
110706	165
110709	165
110710	165
110711	165
110712	165
110713	165
110877	70
110878	70
110906	70
110907	70
111010	283
111470	68, 145, 274
111620	29
111697	287
112119	200
112174	72
112196	162
112197	157
112198	157
112255	162, 163
112859	276
113053	72
113093	286
113497	200
113859	29
114017	91
114558	125, 126, 130, 131, 142, 210
114829	85
115042	75, 79, 151, 152, 198
116229	277
116306	173, 174, 183
118464	280
119577	266
120581	275
120601	275
124398	179
124461	261
124470	261
124541	182
124548	184
124549	184
124550	184
124581	173, 181, 182, 242
124603	173, 182
124671	174, 182
124875	174, 181, 182, 242
124963	173, 174, 183
124964	176
124965	176
125014	184
125074	182
125078	171, 174, 175, 179
125079	174, 182
125242	182, 261
125478	175
125479	175
126075	261
126076	261
126359	254, 260
126360	254, 260
126361	254, 260
126362	254, 260
126363	255, 260
126364	255, 260
126375	254
126376	254, 260
126377	254, 260
126379	254, 261
126380	256, 261
126503	254, 260
126504	255, 260
126505	255, 260
126688	256, 261
127167	256, 261
127173	256, 261
127214	258
127217	258
127218	258
127219	258
127220	258
127221	258
127222	258
127223	258
127224	258
127225	258
127271	258
127634	185, 186
127635	185, 186
127637	185, 186
127639	185, 186
127640	185
127642	169, 170, 171
127643	169, 170, 171
127646	182
127647	175
127649	171, 173, 174, 178
127650	178
127651	178
127652	178
127654	178
127655	170, 179
127656	170, 171, 183
127657	183
127663	171, 173, 174, 177
127679	170
127680	170
127711	59, 276
127720	183
127793	185, 186
127794	185, 186
127795	185, 186
127796	185, 186
127800	177
127804	183
127805	183
127806	183
127815	183
127823	183
127873	170
127875	175
129581	118, 119, 120, 121
129591	118, 119, 120, 121
129645	37, 44, 50, 122, 145
129699	70
129876	94
130783	25
131183	50, 118, 122, 145
131184	37, 44, 50, 119, 122, 145
131226	15, 25, 100
131380	147
131394	147
131462	15
131733	15, 24, 94, 97, 99, 106
133215	36, 37, 38, 39, 40, 41, 43, 46, 47, 48, 280
133216	280
133217	280
133375	213, 214
133376	213, 214
133377	214
133412	214
133480	102
150171	286
150286	286
150287	227, 286
150622	163
151519	286
154616	269
155332	15, 25
155470	70, 137, 138, 139, 140, 141, 142, 287
155494	68, 70, 72, 126, 132, 133, 134, 137, 138, 139, 140, 141, 142, 287
155495	287
155541	126, 132, 133, 134, 142, 210, 287
155570	205, 287
155653	287
155665	287
155677	287
155699	286
155836	163
155865	287
156022	286
156172	287
156173	287
156296	286
156580	286
156589	287
156684	50, 287
156789	269
156823	122, 287
156849	59, 129, 142, 286
156859	137, 138
156971	132, 286
157191	286
157416	59, 287
157676	287
157705	50, 118, 119, 120, 287
157785	287
158256	287
158383	287
158491	286
158555	286
158581	286
158586	286
158683	286
158990	281
159153	287
159239	286
159801	287
159840	286
159841	286
159842	227, 286
160022	51, 287
160327	70, 210, 287
160754	69, 81, 83, 143, 147
161037	287
161077	287
161889	287
162024	286
162449	286
162505	287
165198	119, 286
168085	72
168595	286
169967	285
169969	210
169970	119, 199, 285
169971	125, 126, 129, 130, 131, 142, 285
171818	72
172405	68
175013	286
176393	286
176684	68
180685	227, 282
180698	237, 242, 248, 259
183241	144
183243	144

Index

Part No.	Page No.
186463	144
186472	29
187359	274, 277
187754	68
188845	71, 210
190125	197
191075	68, 72
191126	72
191128	72
191130	72
191131	72
191287	91
191288	91
191289	91
191294	91
191295	91
194048	286
194347	199
196220	137, 138
196471	111
200020	164
200021	164
200325	160, 163, 164
200326	54, 58, 63, 69, 81, 83, 126, 129, 132, 137, 138, 143, 147, 152, 154, 203, 211
200389	145, 159, 160, 161, 163, 164
201881	164
202577	125, 126, 129, 130, 131, 142, 145, 160, 205
202579	161, 163
202600	161
202650	164
202654	165
202858	199, 275
202869	144
202965	287
203156	68
203198	163
203320	70, 126, 132, 133, 134, 142, 284
203497	163, 164
203504	163, 164
203521	228, 231
203522	228, 231
203523	228, 231
203524	228, 231
203525	228, 231
203526	228, 231
203597	163
203622	54, 58, 71, 84, 126, 131, 145
203650	68, 84, 125, 126, 130, 131, 145
203664	130
203688	54, 58, 63, 67, 71
203697	157, 162
203701	157
203702	157
203703	157
203857	57, 58, 60, 62
203872	57, 58, 60, 62
203876	57, 58, 59
203976	130, 131
203987	67, 72, 81
203992	68
204072	163
204076	71
204082	163
204083	163
204084	163
204095	60, 64
204121	132
204130	144
204134	125, 130
204144	71, 203
204204	163
204254	57, 58, 60, 62
204264	60
204351	130
204353	132
204385	69, 137, 138, 143
204461	132, 137, 138
204467	132
204560	70, 284
204574	81, 83, 84, 129, 131, 137, 138, 143, 147, 152, 154, 203, 211
204741	228, 231, 236
204867	84
204897	163
204929	164
205054	71
205090	281
205102	137
205337	144
205339	132, 137, 138
205394	136, 137, 139
205395	136, 137, 139, 140, 141
205418	70, 137, 138, 139, 140, 141, 142, 198, 284
205528	132, 137, 138
205532	164
205554	164
205568	164
205582	164
205592	164
205626	62, 63
205699	137, 138
206197	207
206199	199
206264	281
206405	128, 129, 203
206496	205
206502	205
206655	60
206656	64
206699	128, 129, 203
206700	128, 129, 203
207361	60, 64, 133, 139, 154
207366	133, 139, 154
207367	60, 64
207561	69, 143
207562	69, 143
207579	72
207651	199
207755	207, 275
207946	163
207947	163
207948	163
208009	269
208390	280
208393	280
208434	287
208536	199, 282, 285
208610	151, 152, 284
208611	284
208630	280
210881	210
214570	205
214583	210
214656	284
214658	84
214847	67
214848	67, 207, 211
214849	207
214926	163
214955	284
215407	29
215474	29
215475	29
215481	29
215487	29
217072	63, 67, 280
217073	280
217074	276
217359	210
217430	287
218093	70, 284
218115	66
218316	66, 210, 276
218334	207
218340	227, 236, 241
218341	227, 236, 241
218491	284
218545	227, 282
218549	41, 48, 55, 59, 225, 226, 227, 235, 236, 240, 241, 242
218550	225, 226, 227, 235, 236
218588	29
218903	70
218969	270, 277
218970	277
220107	112
220112	112
220170	129
220171	129
220590	283
220591	68, 70, 283
220592	283
220593	283
220596	197
220598	59, 70, 283
220600	283
220608	283
220653	125, 130, 144
220654	125, 131, 133, 144
220969	273
221007	277
221092	283
221093	283
221146	273, 277
221147	273
222011	199, 207, 273, 277
222051	66
222058	69, 81, 83, 129, 203
222059	125, 130, 143
222060	60, 131, 133, 139, 154
222061	60, 131, 133, 139, 154
222062	54, 55, 67, 70
222063	54, 58, 59, 60, 67, 70
222065	62, 63, 64
222066	63, 64, 67, 70
222067	64
222068	63, 67, 70
222069	130
222070	130, 131, 142
222071*	133
222072	126, 132, 133, 134, 142
222073	132, 133
222074	132
222075	139
222076	137, 138, 139, 140, 141, 142
222077	203
222078	129
222079	203
222080	129, 142
222081	129, 142
222082	203
222086	60
222087	57, 58, 62
222095	62, 63, 64
222103	66
222104	66
222118	67, 210
222119	67, 210
222225	227, 236, 241
222243	68, 131, 145
222245	131
222308	55, 58, 59, 66, 67, 68, 136
222383	131, 142
222602	66
222629	111
222645	111
222902	156
222916	199
223107	139
223108	137
223179	29, 103
223187	164
223344	137, 138, 139, 144
223448	111
223695	273, 277
223696	273, 277

Index

Part No.	Page No.
223697	273
223700	144, 147, 154
223701	144, 147, 154
223845	133, 144
223846	137, 138, 139, 144
223888	197, 277
223952	151
224022	204
224023	204
224040	71, 281
224266	140
224417	227, 236
224444	237, 242
224458	205
224459	205
224469	205
224512	54, 58, 276
224534	59
224541	59
224579	60, 64, 71
224665	274
224666	274, 277
224667	274
224700	274
224701	274
224702	274, 277
224741	80, 81
224742	80, 81
224751	153, 154
224752	153, 154
224759	274
224762	277
224825	204
224826	204
224835	197, 198, 200, 272
224872	145, 160
224873	264, 265, 269, 270, 272
224912	153, 154
224915	154
224916	154
224955	273
225006	131
225014	132
225016	132
225026	131
225094	58
225272	269
225376	84
225378*	84
225380	84
225384	84
225640	58
225642	58
225728	58
225773	130
225781	137
225782	63
225786	63
225827	130
225844	157
225852	58
225853	63
225880	84
225914	157
225931	58
226012	130
226013	132
226018	137
226269	203
226289	85
226290	85
226342	203
226940	209
226941	209
226942	209
226943	209
226944	209
226945	209
226947	209
226948	209
226951	209
226952	209
226953	209
233807	130, 131, 159
233933	159
234237	203, 205
235346	270
235457	204
235998	67, 72
236054	67, 71, 198, 199, 210
236058	125, 126, 142
236171	164
236205	282
236206	282
236211	282
236273	200
236753	80, 81
236754	82, 83
236763	29
236764	29
236778	72, 81, 83
236864	81, 83, 154, 156
237075	54, 58, 68
237129	209
237130	209
237131	209
237132	209
237133	209
237134	209
237160	197
237161	197
237211	199
237526	62, 63
237601	67, 72
237653	80, 81
237861	283
237865	283
237866	283
237872	227, 236, 241
237873	236, 241, 248, 259
237874	236, 241, 248, 259
237893	29, 59, 67, 72
237904	81
237932	248
238108	62, 63
238125	68
238245	63, 67, 72
238246	67, 70
238247	70
238370	68, 72
238371	90
238428	198, 200
238429	69
238431	69
238432	69
238433	69
238434	69
238436	205
238438	205
238440	205
238592	72
238593	72
238595	72
238596	72
238866	264, 269
238887	90
238899	200
238909	199
238996	29
239019	29
239301	269
239302	269
239663	205
239702	66
239703	66
239705	84
239706	112
239707	84
239729	136, 138, 139
239730	136, 138, 139, 140, 141
239731	136
239829	90
239877	128, 130
239887	128, 131, 132, 133, 134
239888	128, 132, 133, 134
239949	90
239950	90
239951	90
239952	200
239965	142
239966	142, 205
240416	91
240417	29, 67, 69
240429	67, 72
240453	91
240684	272
240685	272
240718	69
240832	269, 270, 272
241246	144
241633	59
241657	200
241663	69, 143
241906	188, 193, 198, 200, 271, 272, 273
241908	283
242055	145, 160
242056	125, 126, 129, 130, 131, 142, 145, 160
242057	145, 160
242058	145, 160
243161	205
243650	269
243669	188, 192, 198, 200
243817	139
243835	91
243836	91
243837	91
244038	59
244055	270
244342	29
244628	63
244635	138, 141
244636	138, 141
244637	138
244644	134
244645	134
244657	151, 152
244679	198
244680	198
244681	198
244682	198
244844	140, 141, 142, 198, 275
244845	275
244846	63
244847	63
244905	140
244906	140, 141
245694	130
245695	130
245696	131
245697	131
246775	53, 54, 55
246780	124, 126
246781	124, 126
246903	54
246904	54
246906	54
246907	54
246909	124, 125
246910	125
246911	125
246913	125
246914	126
246916	126
246917	126
246946	199
247335	140
247337	140

Index

Part No.	Page No.
247355	140
247443	153, 154
247450	153, 154, 155
247453	103
247540	153
247712	108
247713	108
247714	108
247715	108
247716	108
247717	108
247718	110
247721	110
247722	110
247723	110
247724	110
247725	110
247759	91
247760	91
247888	75
247889	75
247890	79
247891	79
247894	79
247895	79
247973	151
247974	151
247975	151
247976	151
247977	151
247978	151
247979	152
247980	152
247981	152
248097	53, 54, 55
248230	54
248296	72
248312	284
248313	284
248324	72
248622	55
248623	55
248632	265, 269
249058	283
249440	19, 111
249615	126
253848	260
253849	260
253850	260
253852	260
253853	260
255143	75, 79
255277	36, 38, 43, 45, 90
255349	68
255460	108
255461	15, 108
255470	15, 24, 94, 97, 99, 108
255793	94, 97, 110
255852	15, 24, 94, 97, 99, 105, 106
255853	15, 24, 94, 97, 99, 105, 106
255854	15, 24, 94, 97, 99, 105, 106
255855	94, 97, 106
255856	94, 97
255857	15, 24, 99, 108
255858	15, 24, 99, 108
255859	110
255885	100
255921	110
256164	106, 108
256215	38, 42, 43, 44, 45, 46, 48, 49, 55
256216	36, 37, 38, 39, 40, 41, 42, 43, 44, 45, 46, 47, 48, 49, 90
256719	19, 25
257350	91
257351	91
257435	140
257539	19
258693	40, 45, 47, 48
258694	90
260061	213
260124	214
260238	214
273079	15, 99
273156	96
273157	96
273158	96
273165	96
273166	96
273167	96
273168	96
273181	97
286211	204
286517	203, 205
286621	204
512874	134, 141, 143
514150	29
647016	188, 190, 198, 200
647648	188, 190, 200
647731	188, 190, 200, 271, 272, 273
652002	188, 196, 200
948392	141, 143
948393	134, 143
965124	136
965129	136
CM2L5N	152
CM2RBA	152
CM2RBN	152
CM17BN	152
CM53BN	152
CM155N	152
CM515N	152
D0B005	200
D0B020	200
D0B500	200
D0B525	200
D0F005	200
D0F020	200
D0F500	200
D0F525	200
D03005	200
D03050	200
D03200	200
D03255	200
D05007	200
D05070	200
D05200	200
D05277	200
D31255	188, 191, 197, 200
DB3525	188, 194, 200
DF3525	188, 195, 200
HEH006	120, 222
HEL010	222
HEL015	180, 222
HEM004	36, 39, 41, 43, 46, 48, 222
HNHB7#	241
HNHC5#	241
HNHCD#	241
HNHFF#	241
HNLC8#	241
HNLD5#	241
HNLE3#	241
HNMC8#	241
HNMD5#	241
HNMDD#	241
HNPB8#	241
HNPC5#	241
HPH1D#	226
HPH5D#	226
HPH5H#	225
HPH15#	225
HPH23#	225
HPH55#	225
HPL2D#	226
HPL5J#	225
HPL6D#	226
HPL6H#	225
HPL23#	225
HPL23B	227
HPL25#	225
HPL25B	227
HPL33#	225
HPL33B	227
HPL56#	225
HPL65#	225
HPM3B#	226
HPM6D#	226
HPM6H#	40, 41, 42, 47, 48, 49, 55, 59, 225
HPM33#	225
HPM33B	42, 49, 55, 59, 226
HPM65#	225
HSDD5#	240
HSDD5A	181
HSDD5B	181
HSDD5F	181
HSDDD#	240
HSDDDA	181
HSDDDB	181
HSDDDF	181
HSH1D#	235
HSH5D#	235
HSH15#	235
HSH55#	235
HSHB7#	240
HSHC5#	240
HSHCD#	240
HSHFF#	240
HSL2D#	235
HSL6D#	235
HSL25#	235
HSL33#	235
HSL56#	235
HSL65#	235
HSLC8#	240
HSLD5#	240
HSLE3#	240
HSM3B#	235
HSM6D#	235
HSM33#	235
HSM65#	235
HSM65B	240
HSMC8#	240
HSMCF#	240
HSMD5#	240
HSMDD#	240
HSPB8#	240
HSPC5#	240
P14DCS	151
P14MCS	151
P26DCS	151
P26MCS	151
P29DCS	151
P29MCS	151
P55DCS	151
P55MCS	151
P63DCS	151
P63MCS	151
P68DCS	151
P68MCS	151
XNH55D	236
XNL56D	236
XNL65D	236
XNM65D	236

AMERICAS

MINNESOTA
Worldwide Headquarters
Graco Inc.
88-11th Avenue N.E.
Minneapolis, MN 55413

MAILING ADDRESS
P.O. Box 1441
Minneapolis, MN 55440-1441
Tel: 800-275-5574 Fax: 612-623-6777

EUROPE

BELGIUM
Graco BVBA
Industrieterrein-Oude Bunders
Slakweidestraat 31
B-3630 Maasmechelen,
Belgium
Tel: 32 89 770 700 Fax: 32 89 770 777

ASIA PACIFIC

AUSTRALIA
Graco Australia Pty Ltd.
Suite 17, 2 Enterprise Drive
Bundoora, Victoria 3083
Australia
Tel: 61 3 9468 8500 Fax: 61 3 9468 8599

CHINA
Graco Fluid Equipment (Shanghai) Co., Ltd.
Building 7, No.1-2
Wenshui Road 299,
Jing'an District
Shanghai 200436
P.R.China
Tel: 86 21 649 50088 Fax: 86 21 649 50077

INDIA
Graco Hong Kong Ltd.
India Liaison Office
Room 443, Level 4
Augusta Point, Golf Course Road
Gurgaon, Haryana, India 122001
Tel: 91 124 435 4208 Fax: 91 124 435 4001

JAPAN
Graco K.K.
1-27-12 Hayabuchi
Tsuzuki-ku
Yokohama City, Japan 2240025
Tel: 81 45 593 7300 Fax: 81 45 593 7301

KOREA
Graco Korea Inc.
Shinhan Bank Building
4th Floor #1599
Gwanyang-Dong, Dongan-Ku,
Anyang-si, Korea 431-060
Tel: 82 31 476 9400 Fax: 82 31 476 9801

©2022 Graco Inc. 303245 Rev. AJ 7/22 All other brand names or marks are used for identification purposes and are trademarks of their respective owners. All written and visual data contained in this document are based on the latest product information available at the time of publication. Graco reserves the right to make changes at any time without notice. For more information on Graco's intellectual property, see www.graco.com/patent or www.graco.com/trademarks.

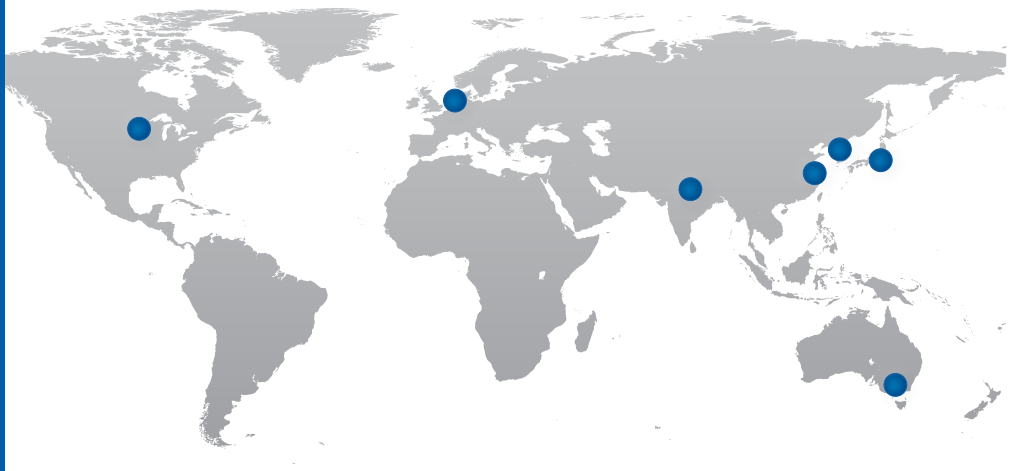

Graco's got you covered

Facilities Worldwide for Global Support

Quality First

At Graco, we pride ourselves on providing best-in-class products. Engineered solutions are manufactured in our own facilities, with the highest standards in the industry. We provide you with world-class customer support and expertise to help solve your lubrication challenges.

Global Reach

Graco has facilities across the globe to provide you with the products and service *you* need, where *you* live. Plus, Graco has dedicated field experts in all areas of the world to support the products we sell.

Product Capabilities

Graco has a broad range of products to provide solutions that meet your needs. Our products are engineered and tested to perform in the harshest environments so you can be certain your equipment is protected and working at peak performance.

Contact us today!

Call **800-533-9655** to speak with a Graco representative, or visit **www.graco.com** for more information.

GRACO